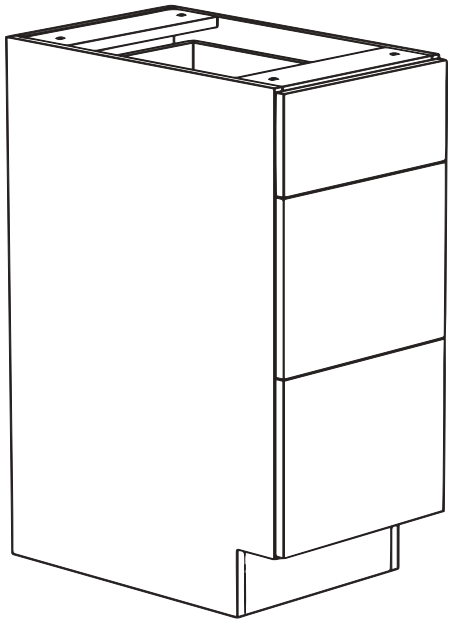

ASSEMBLY INSTRUCTION

DB12-DB30

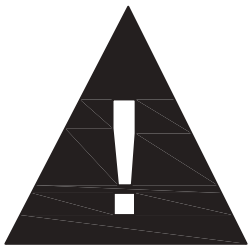

Warning: Excessive weight hazard!

Use two or more people to move, assemble, or install cabinets to avoid back injury. do not leave children unattended near cabinets. high risk of tipping if cabinets are installed incorrectly: securely attach cabinets to the wall to avoid serious injury.

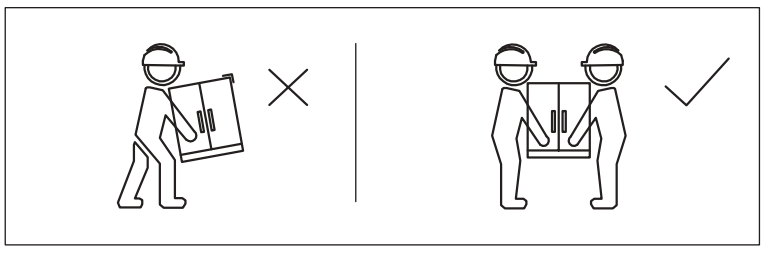

Safety and Care Advice

Important - Please read these instructions fully before starting assembly

• Check you have all the components and tools listed on the following pages.
• Remove all fittings from the plastic bags and separate them into their groups.
• Keep children and animals away from the work area, small parts could choke if swallowed.
• Make sure you heve enough space to layout the parts before starting.

• During assembly do not stand or put weight on the product. this could cause damage.
• Assemble the item as close to its final position (in Ihe same room) as possible.
• Assemble on a soft level surface to avoid damaging the unit or your floor.
• Parts of the assembly will be easier with 2 people .

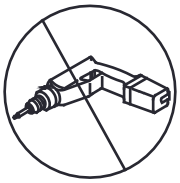

• Toreouce the likelihood of damaging your product please ensure that your power drill is set on a low torque setting.

Care and maintenance

• Only clean using a damp cloth and mild detergent, do no use bleach or abrasive cleaners.

• From time to time check that there are no loose screws on this unit.

• This product should not be discarded with household waste. Take to your local authority waste disposal centre,

Handy Hints

• Assemble all parts and bolts loosely during assembly, only once the product is complete should you fully tighten the bolts

•Regularly check and ensure that all bolts and fittings are tightend properly,

WARNING

In order to help prevent overturning -
please follow these instructions

To prolong wear & tear and avoid damaging the product,
please follow the suggestions below:

- Avoid putting excessive weights inside the drawers.
- Do not push or lean force onto the doors while opened.
- Remove excessive water or liquid from the product as soon as possible.
- Painted doors should not be cleaned with soluble cleaners;
all benzene and resin solvents are not suitable for use as panel cleaning agents.

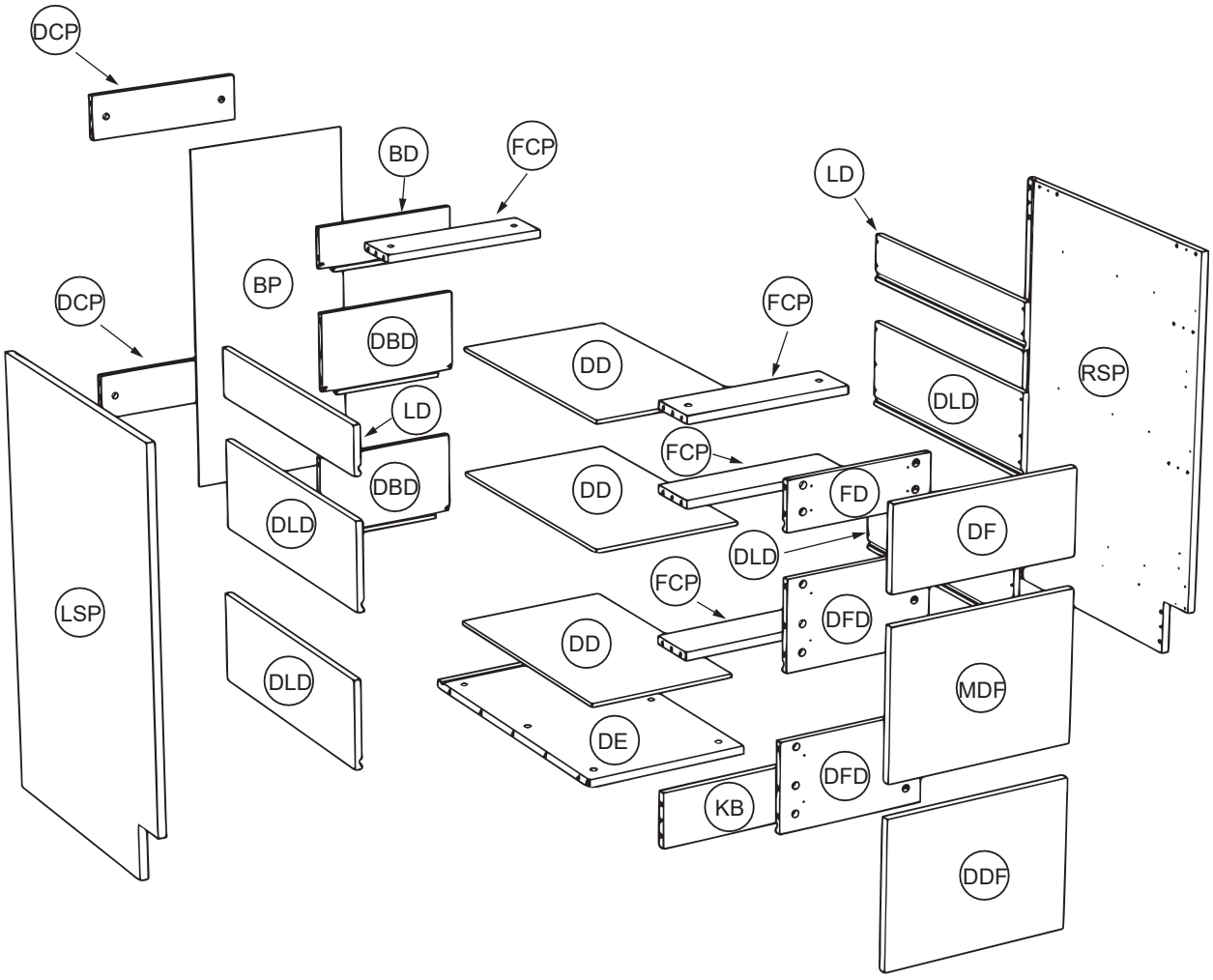
DCP
BD
FCP
LD
BP
DCP
FCP
DBD
DD
RSP
DLD
LD
FCP
DBD
DD
FD
DF
DLD
DLD
FCP
LSP
DFD
DD
MDF
DLD
DE
DFD
KB
DDF

PRODUCT PARTS

LSP	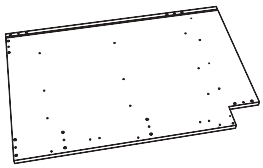	RSP	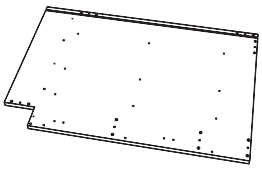	DE	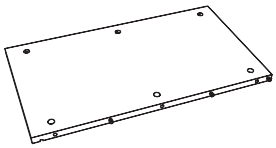
	1PC(S)		1PC(S)		1PC(S)
FCP		DCP		BP	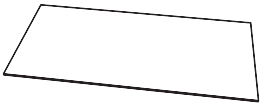
	4PC(S)		2PC(S)		1PC(S)
KB		BD		DBD	
	1PC(S)		1PC(S)		2PC(S)
DD	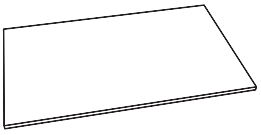	LD		DLD	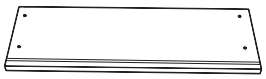
	3PC(S)		2PC(S)		4PC(S)

PRODUCT PARTS

DF	(DB12-DB18) 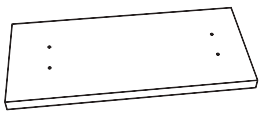	1PC(S)	MDF	(DB12-DB18) 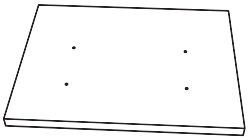	1PC(S)
	(DB21-DB27) 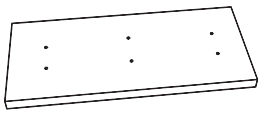	1PC(S)		(DB21-DB27) 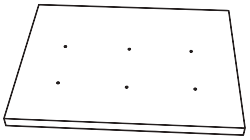	1PC(S)
	(DB30-DB36) 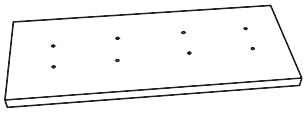	1PC(S)		(DB30-DB36) 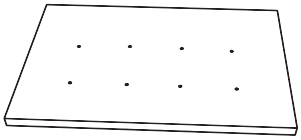	1PC(S)
FD	(DB12-DB18) 	1PC(S)	DFD	(DB12-DB18) 	2PC(S)
	(DB21-DB27) 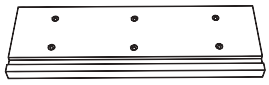	1PC(S)		(DB21-DB27) 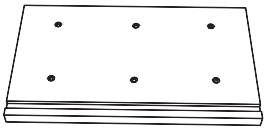	2PC(S)
	(DB30-DB36) 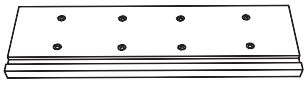	1PC(S)		(DB30-DB36) 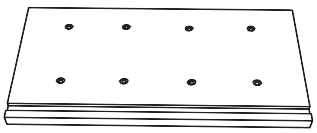	2PC(S)

DDF	(DB12-DB18) 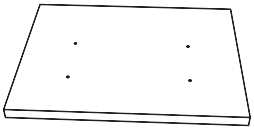	2PC(S)
	(DB21-DB27) 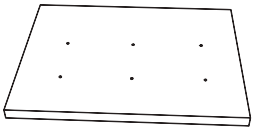	2PC(S)
	(DB30-DB36) 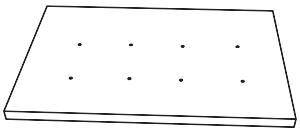	2PC(S)

INCLUDED HARDWARE

ⓐ x 20 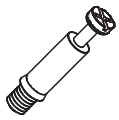	ⓑ x 20 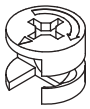	ⓓ x 42 Φ4*16 	ⓕ x 6 	ⓖ DB12-DB18:×12 DB21-DB27:×18 DB30-DB36:×24 Φ4*25 
ⓛⓗ x 3 	ⓡⓗ x 3 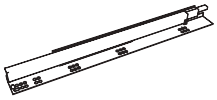	ⓛⓙ x 3 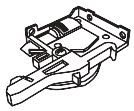	ⓡⓙ x 3 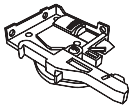	ⓢⓐ x 32 
ⓢⓑ x 32 				

RECOMMENDED TOOLS

SCREWDRIVER	DRILL	RUBBER MALLET	GLUE
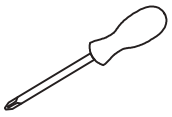			

1

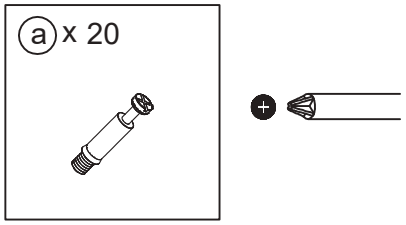

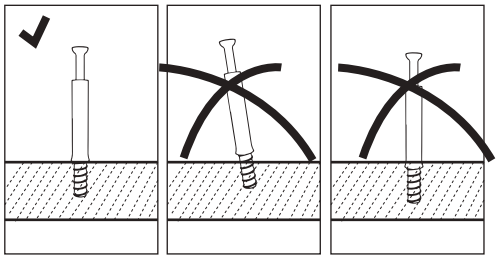

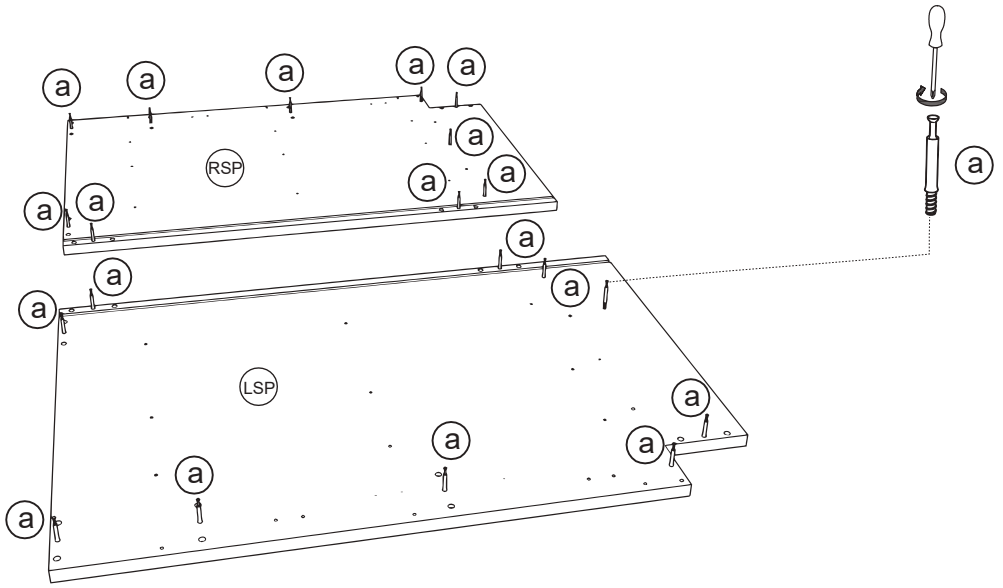

2

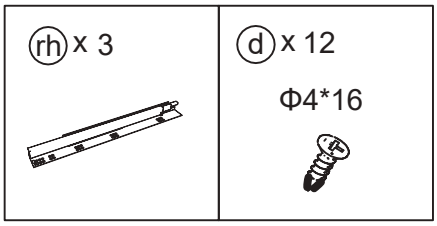

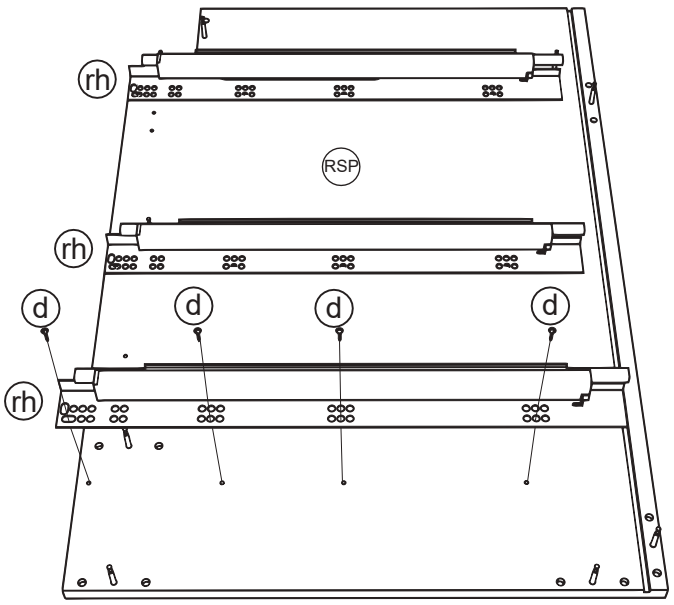

3

lh x 3	d x 12 Φ4*16



4

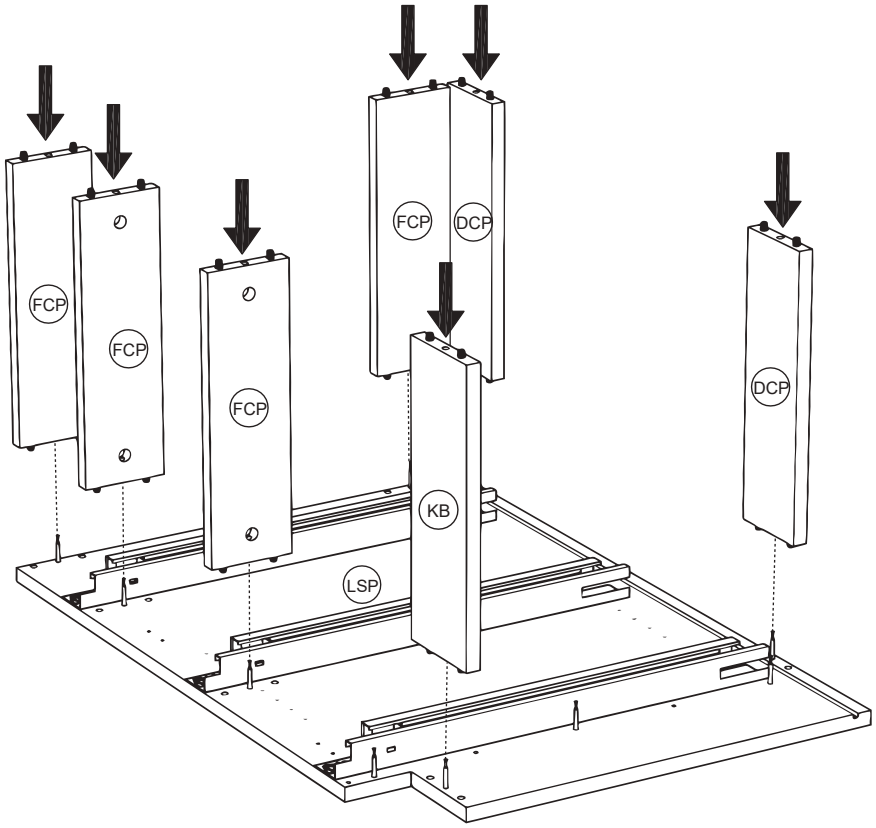

5

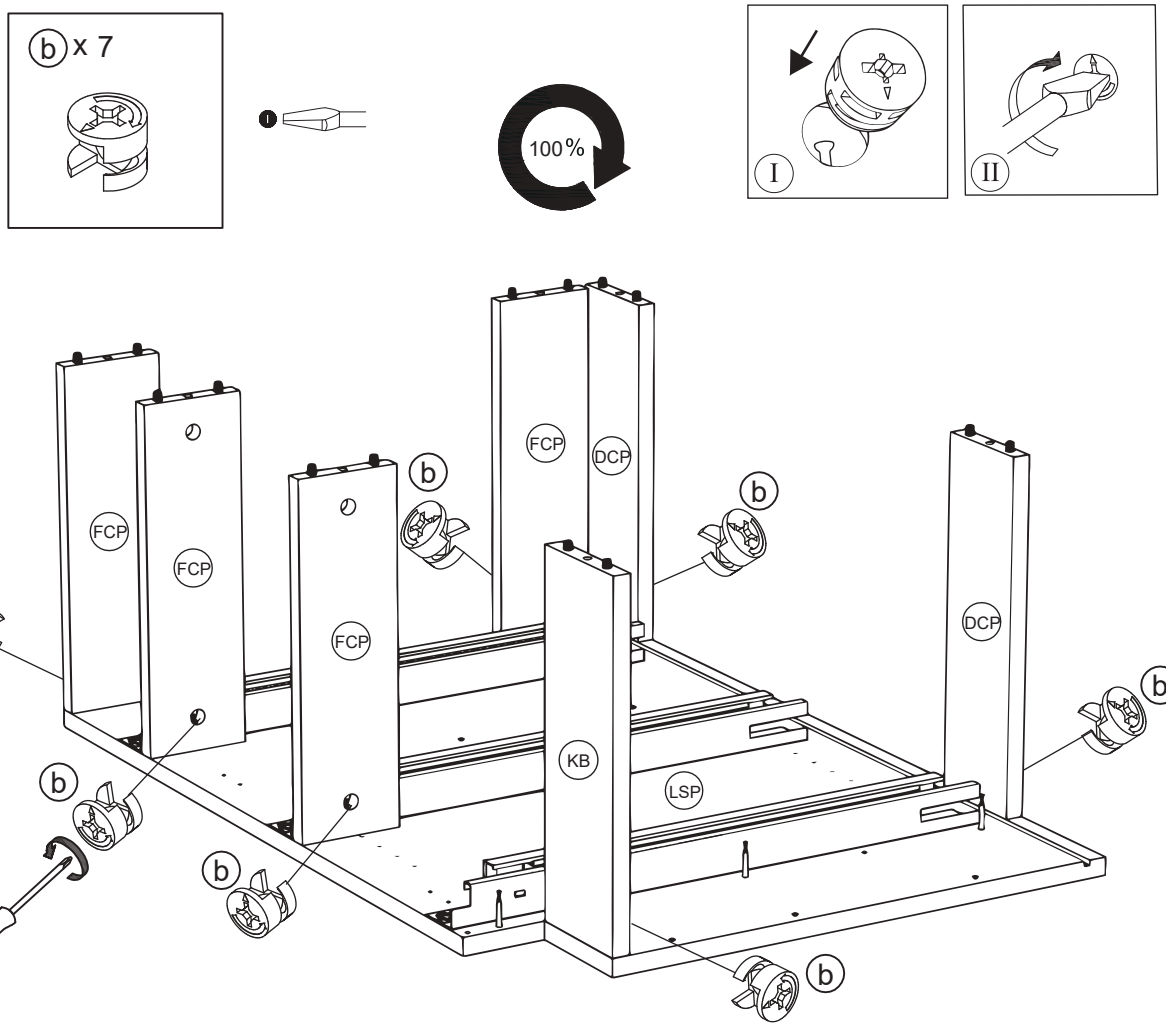

6

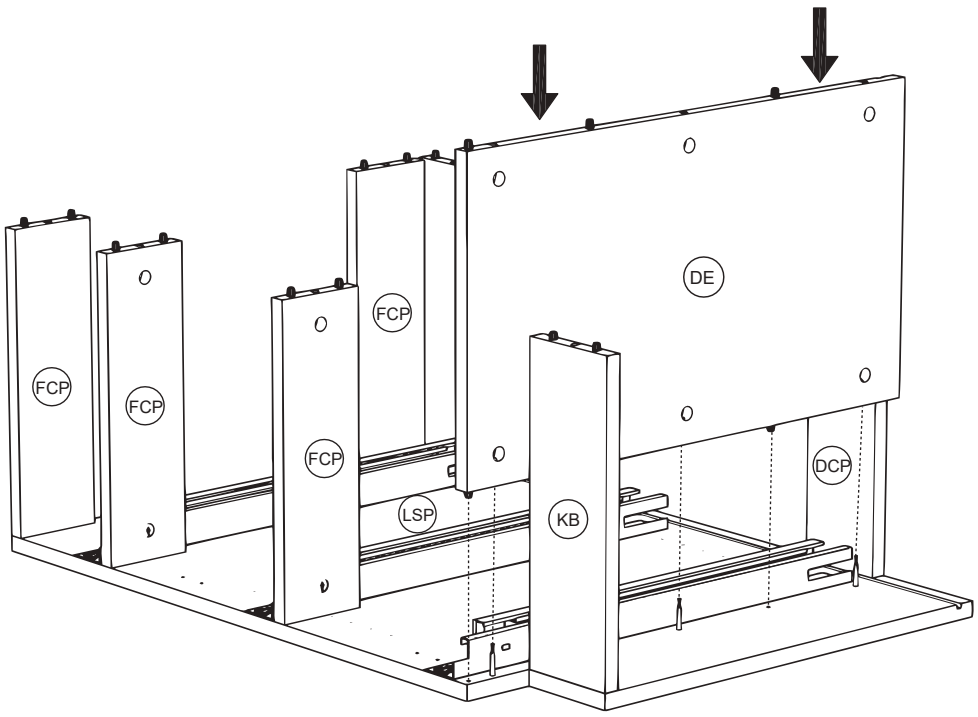

7

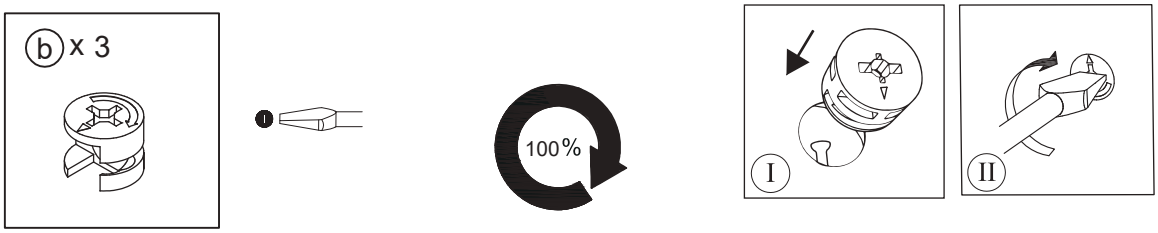
b x 3
100%
I
II

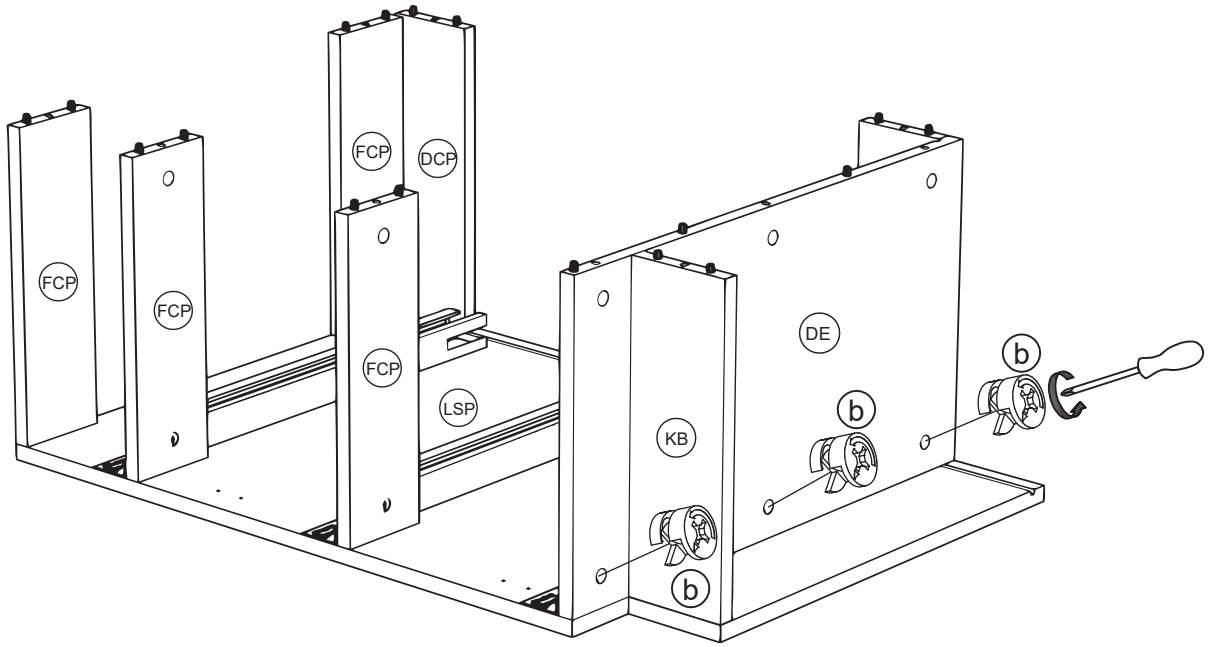
FCP
DCP
FCP
FCP
FCP
LSP
KB
DE
b
b
b

8

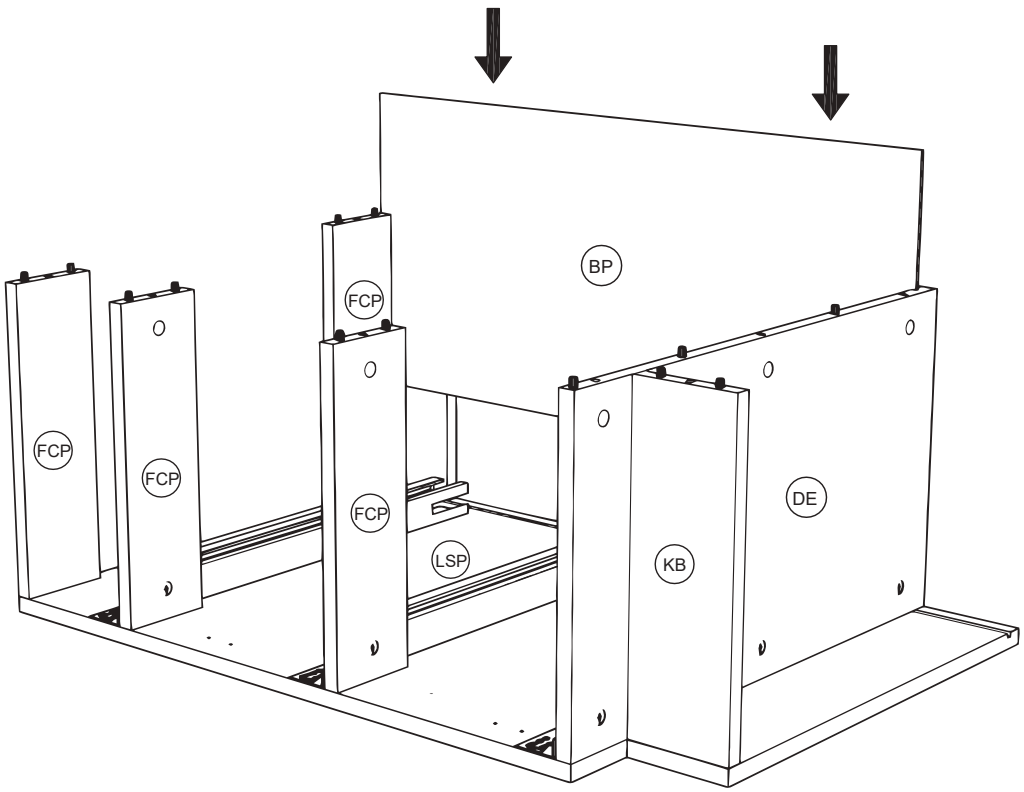
BP
FCP
FCP
FCP
FCP
LSP
KB
DE

9

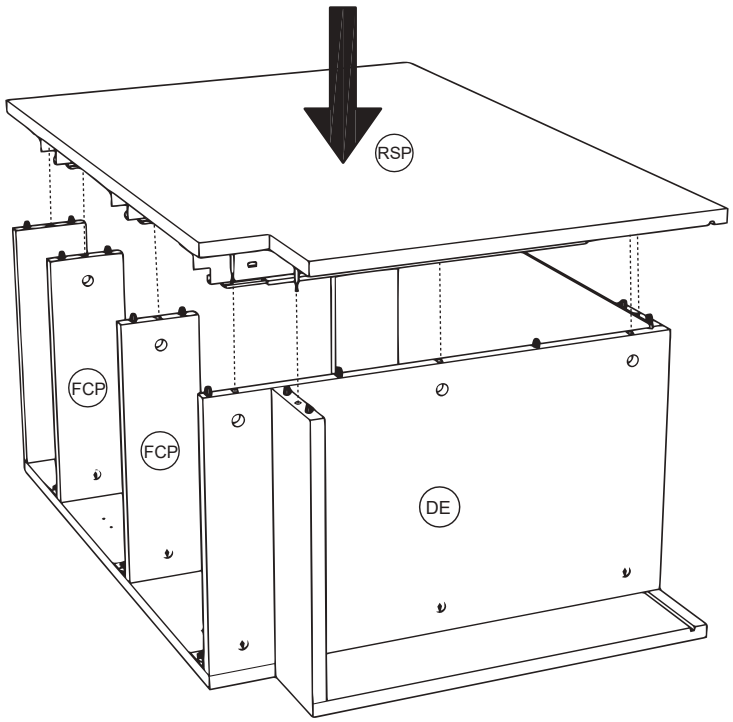

10

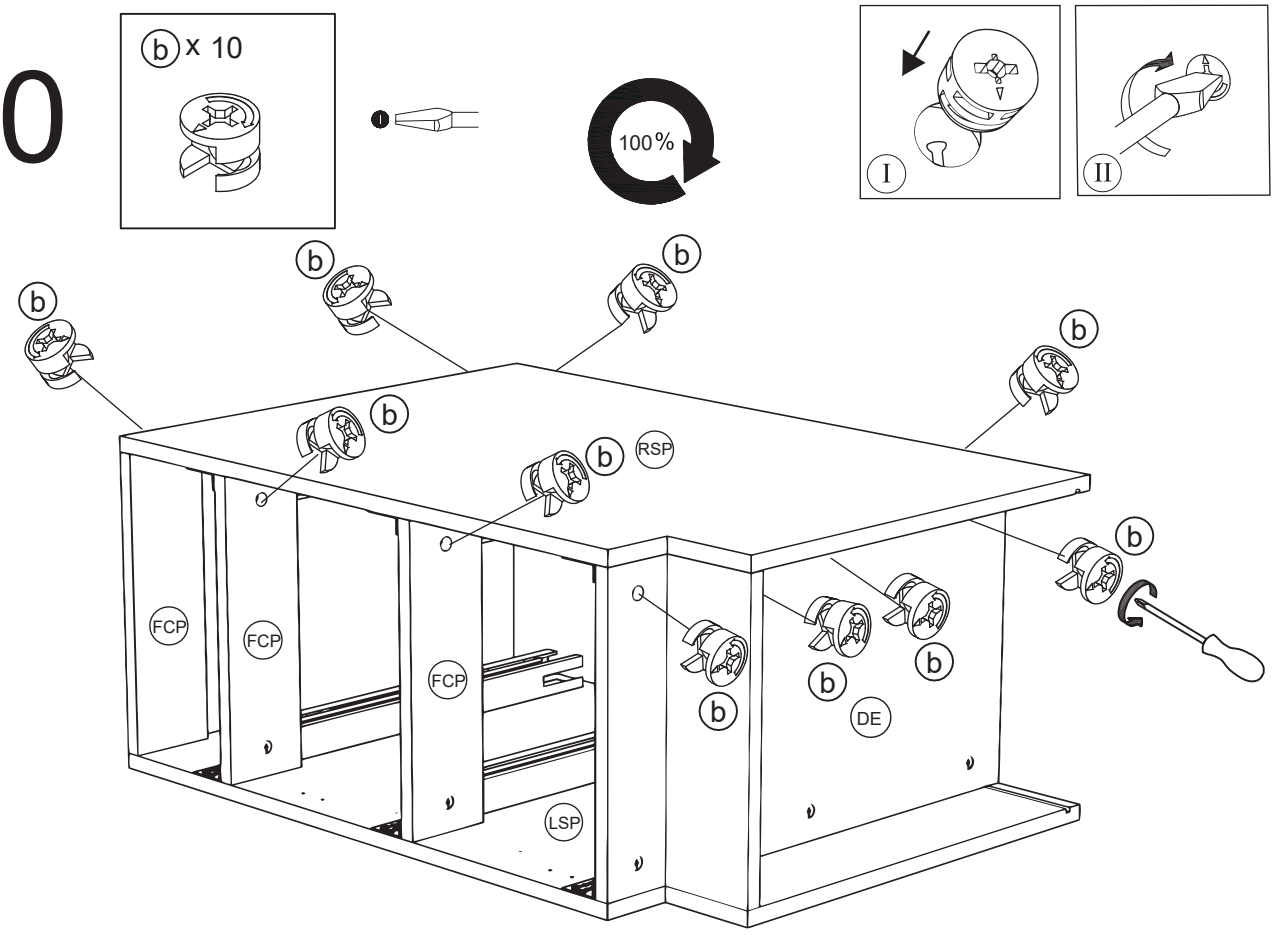

11

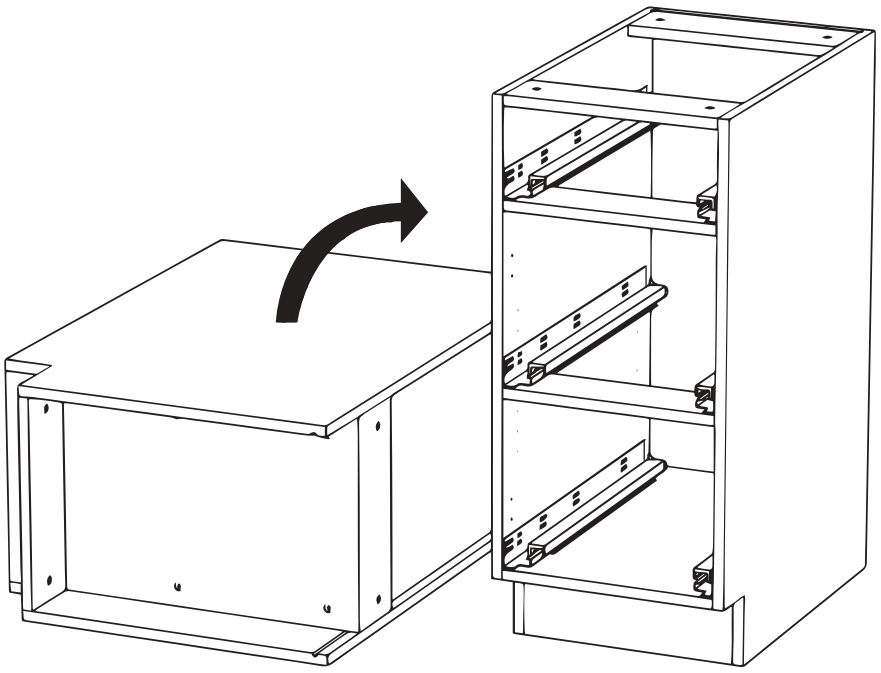

12

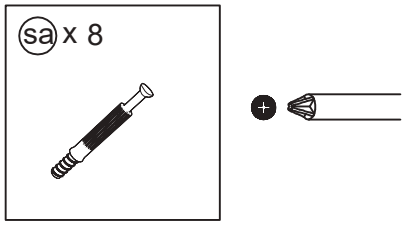

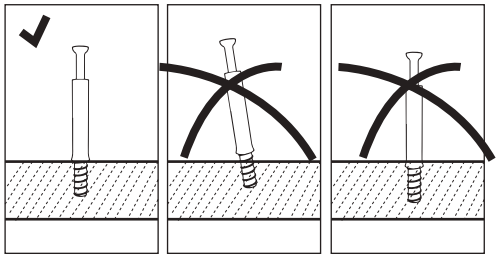



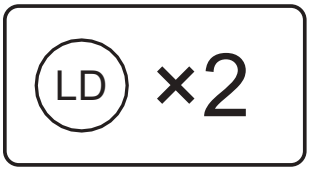

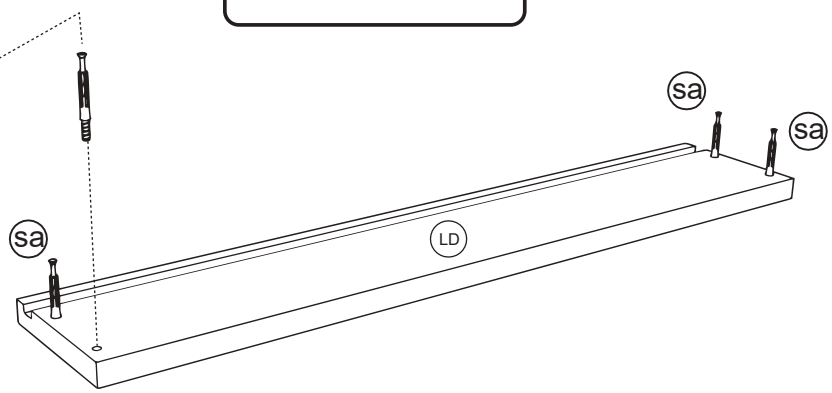

13

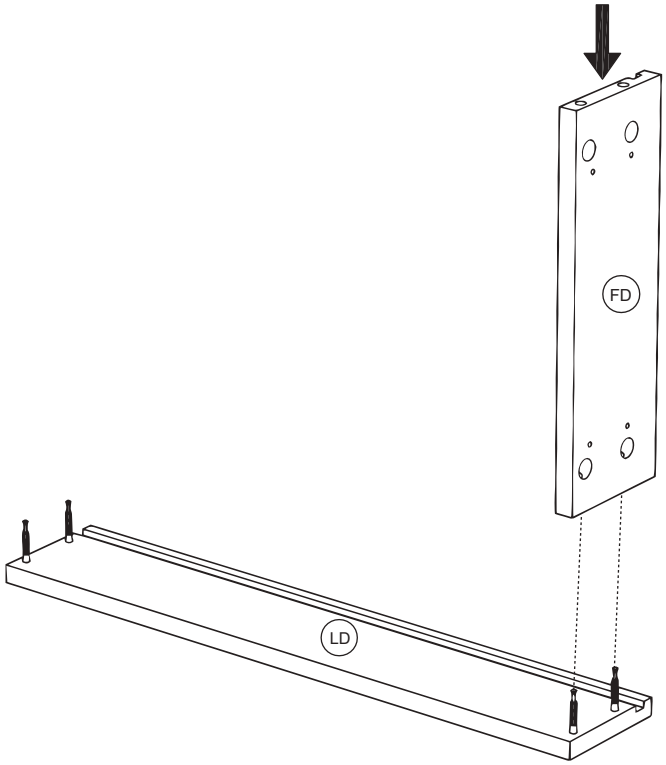

14

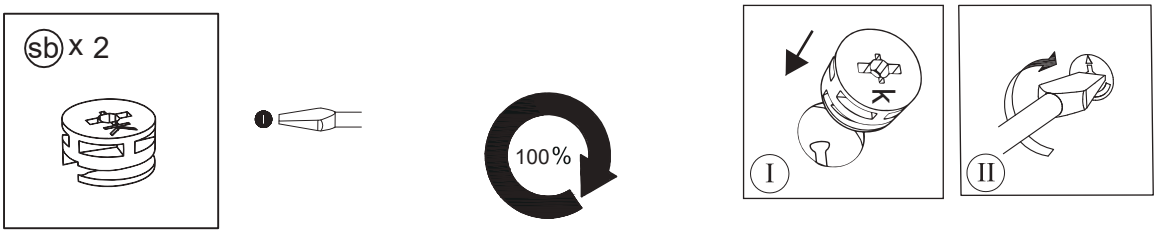

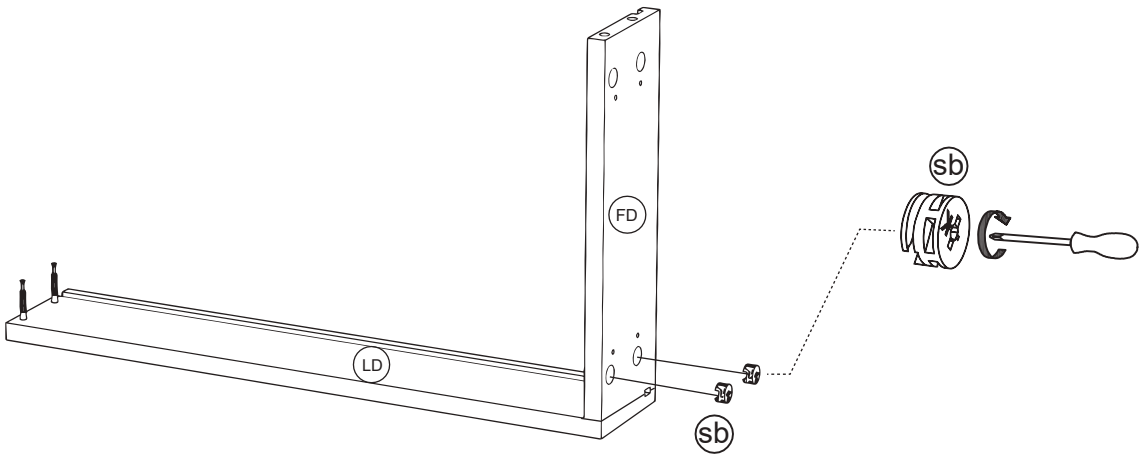

15

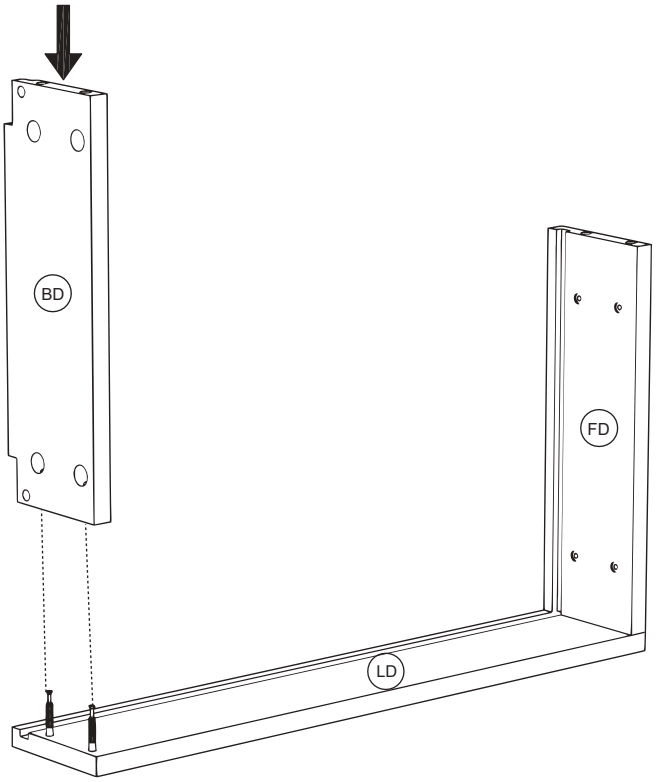

16

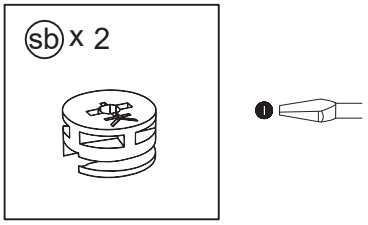

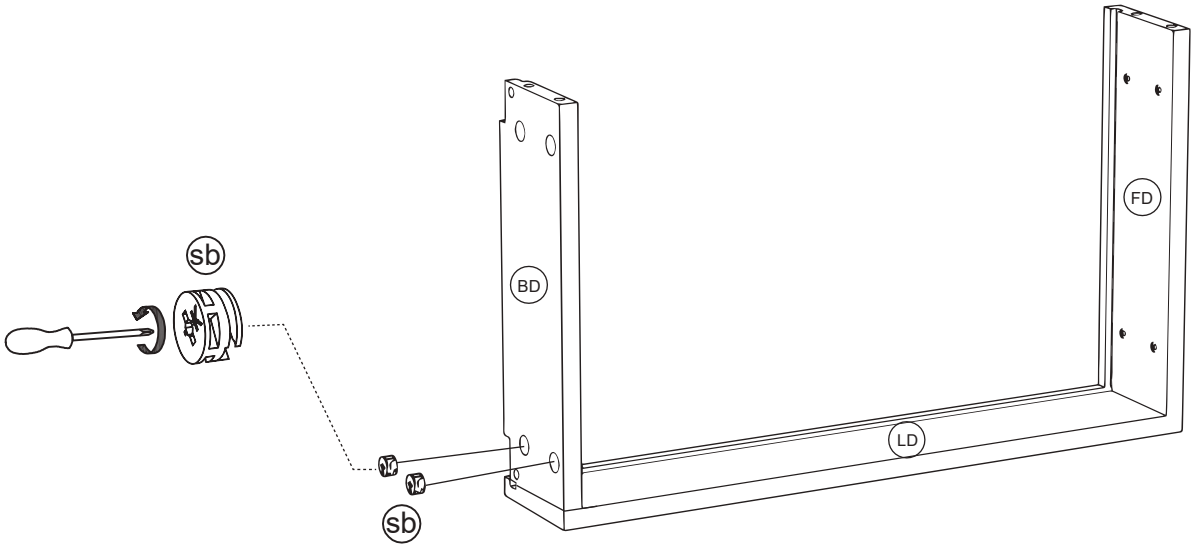

17

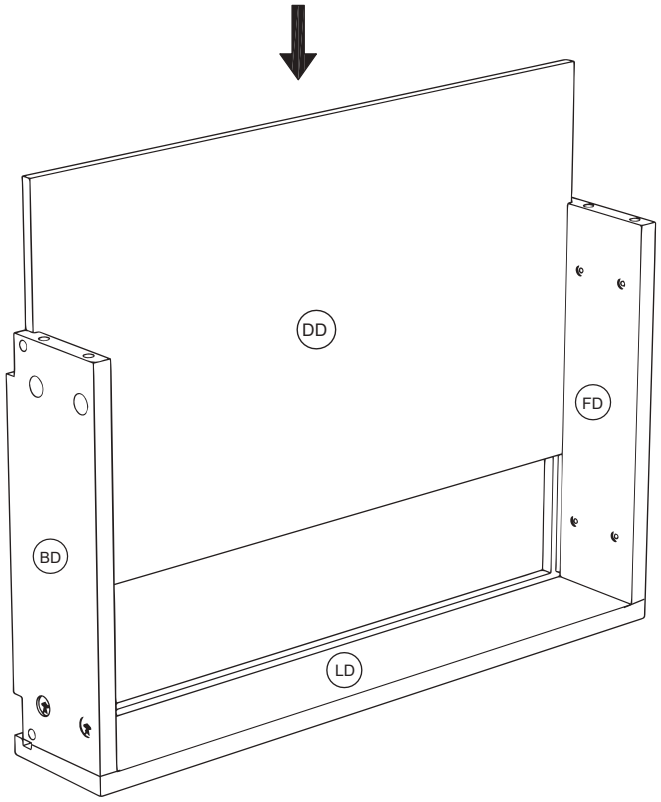

18

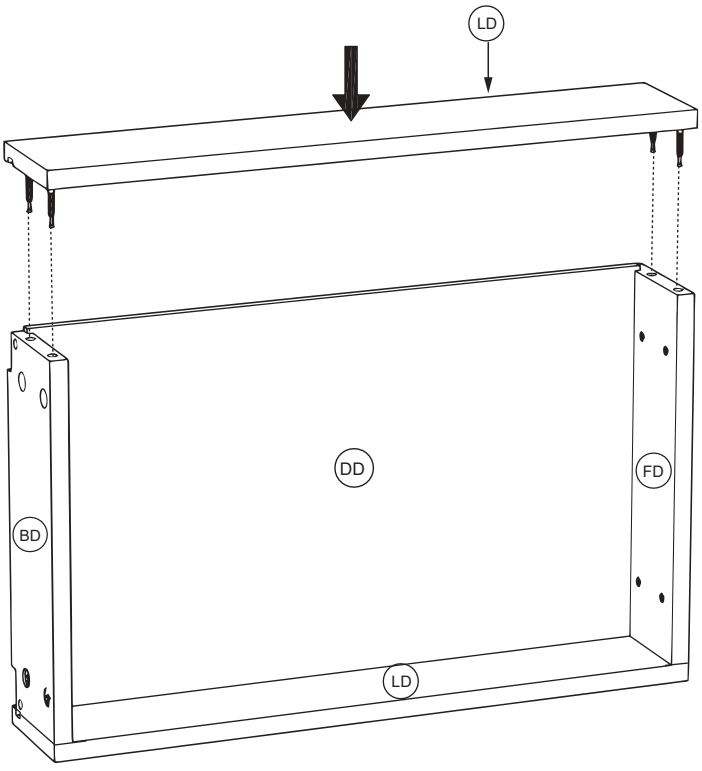

19

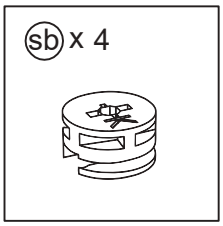





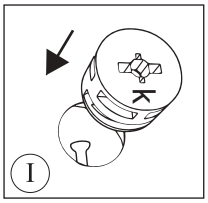

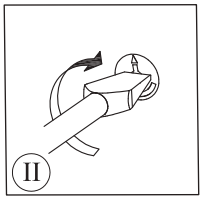

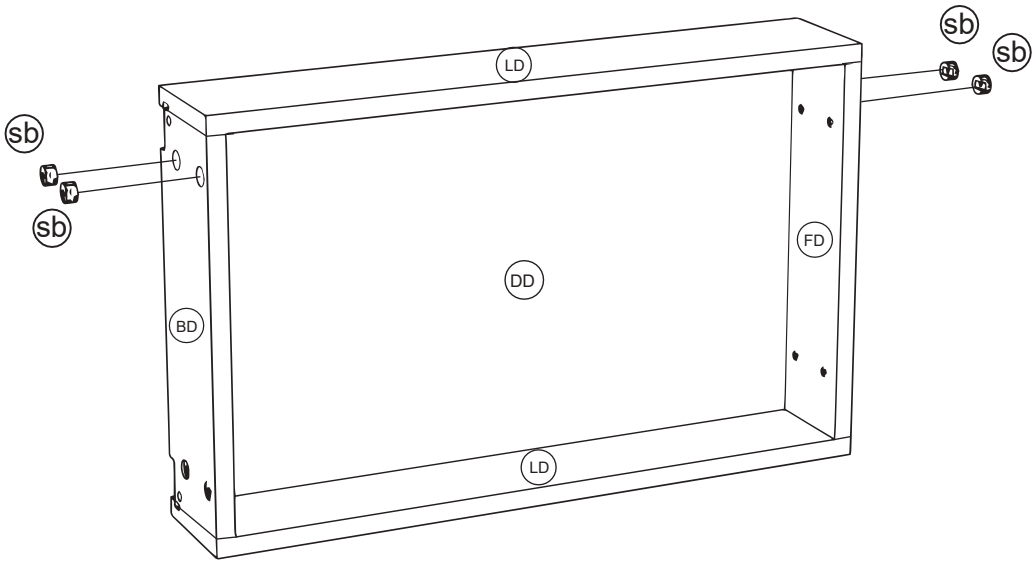

20

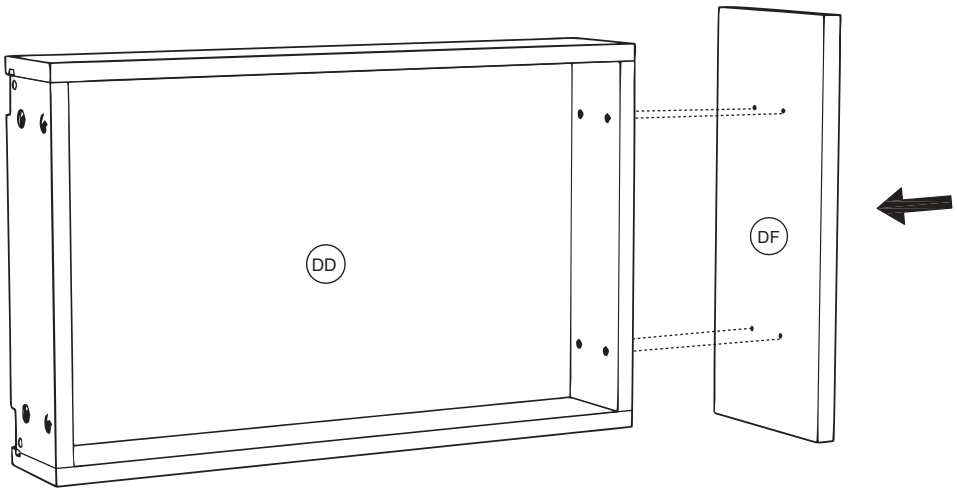

21

ⓖ DB12-DB18:×4
DB21-DB27:×6
DB30-DB36:×8

Φ4*25



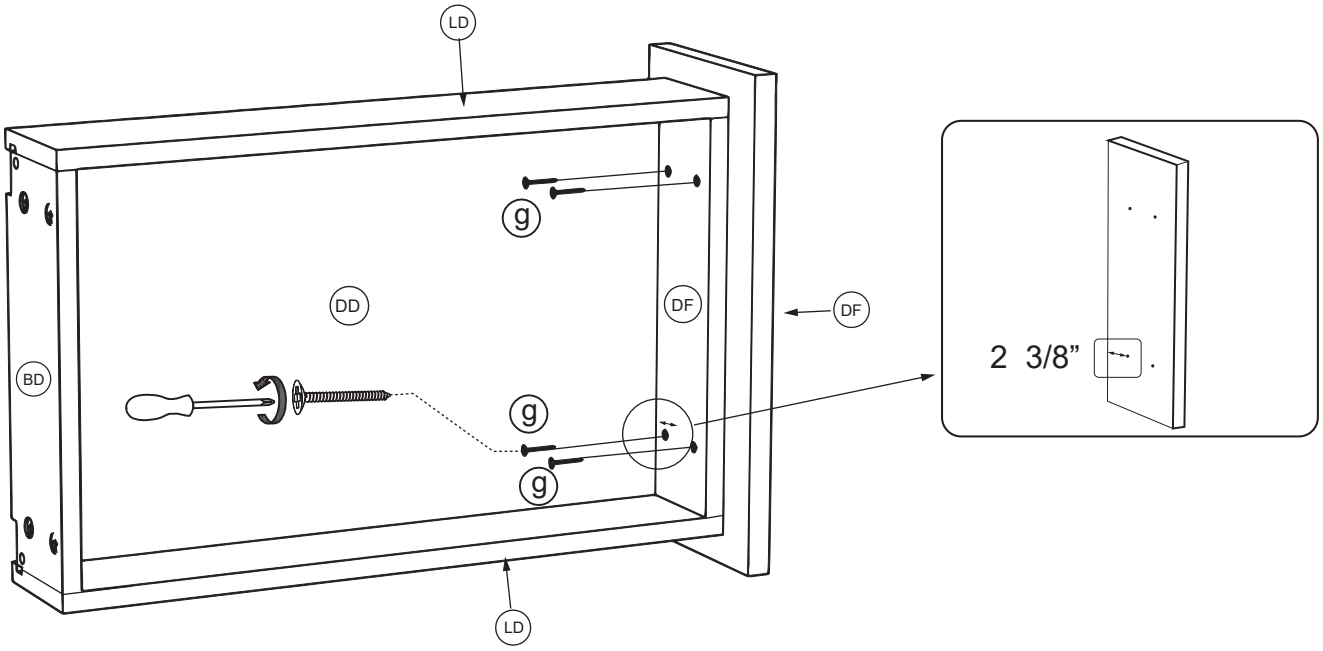

（DB12-DB18:×12）

22

ⓙ x 1

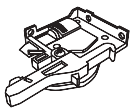

ⓡj x 1

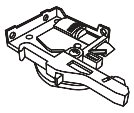

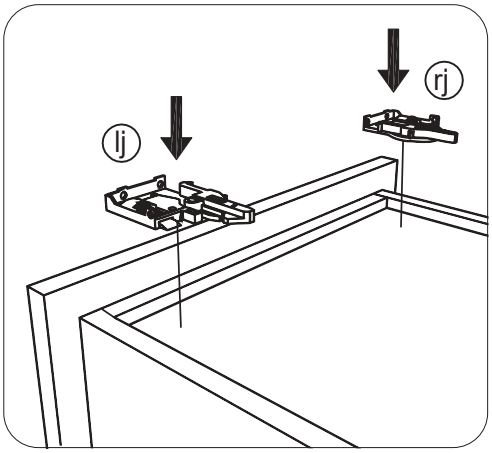

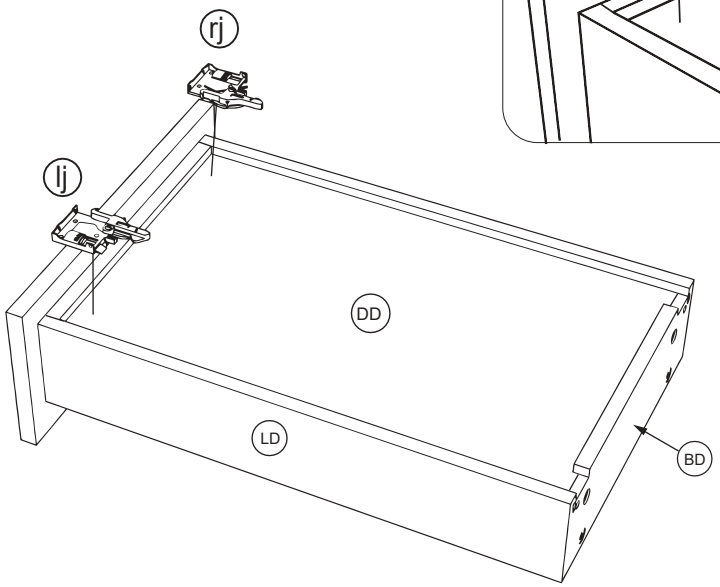

23

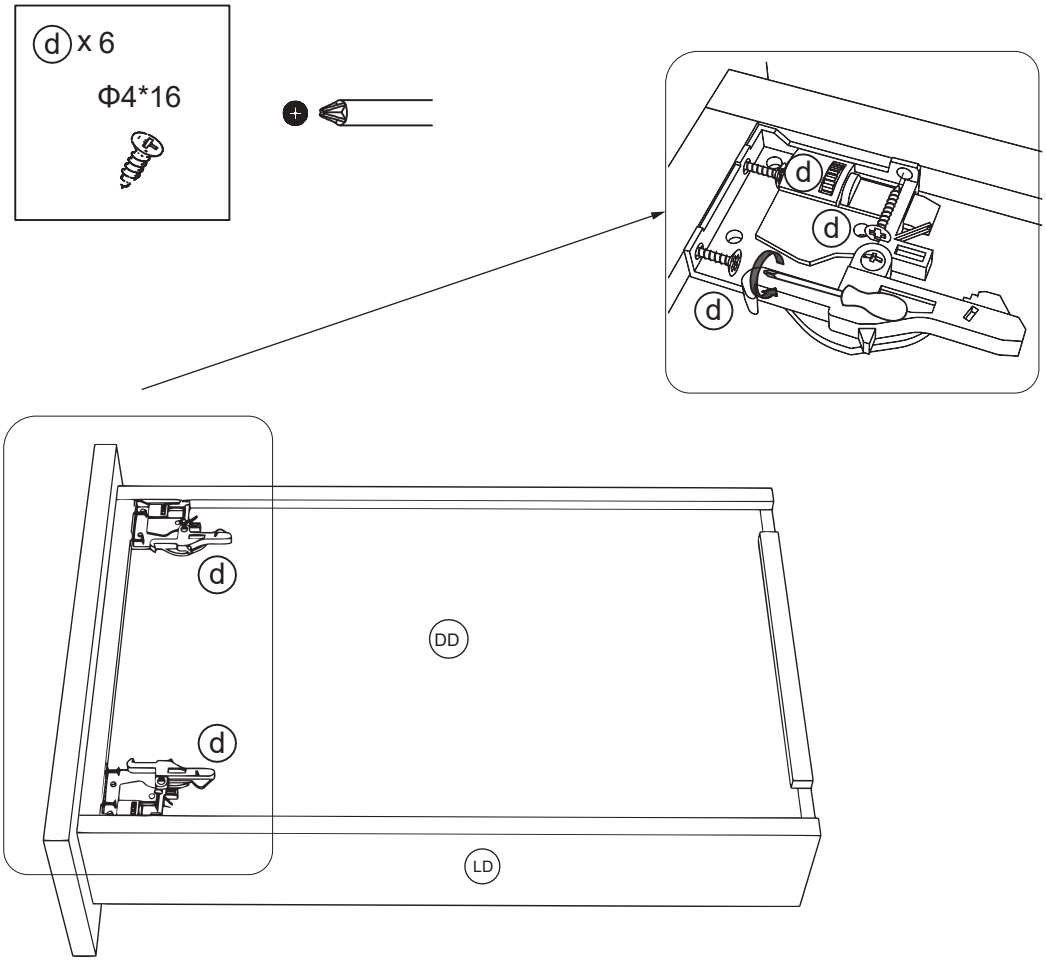

24

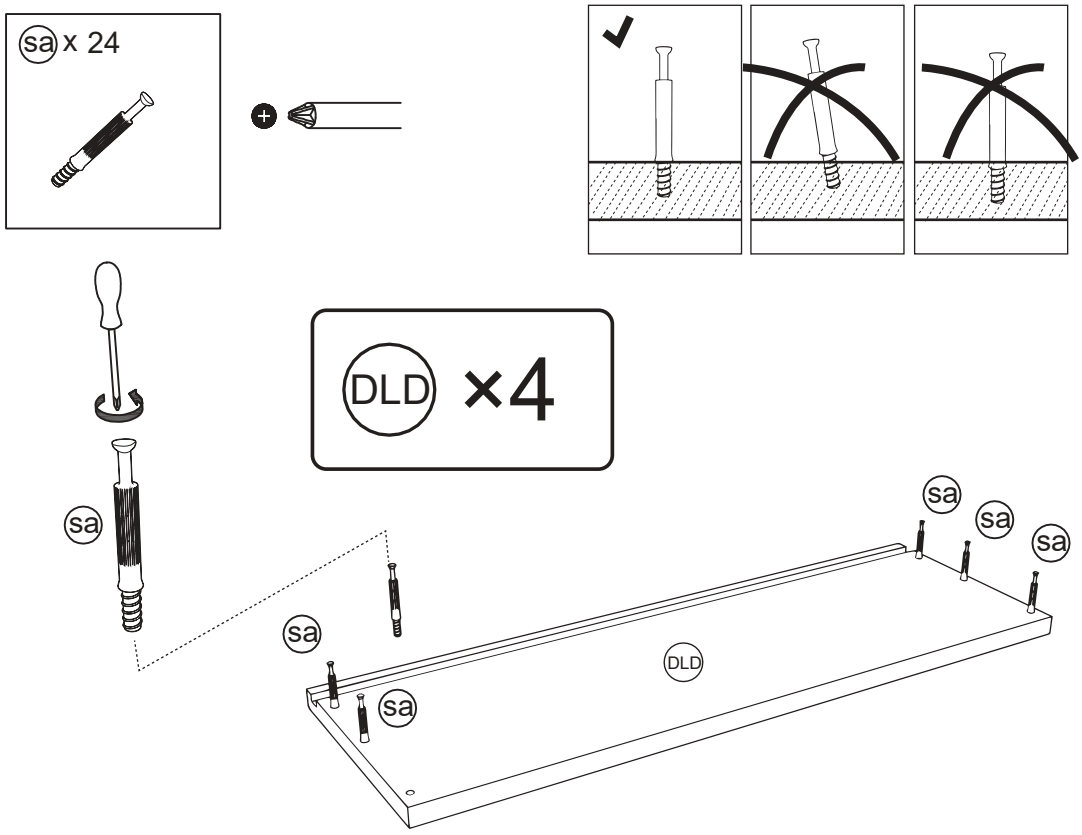

25

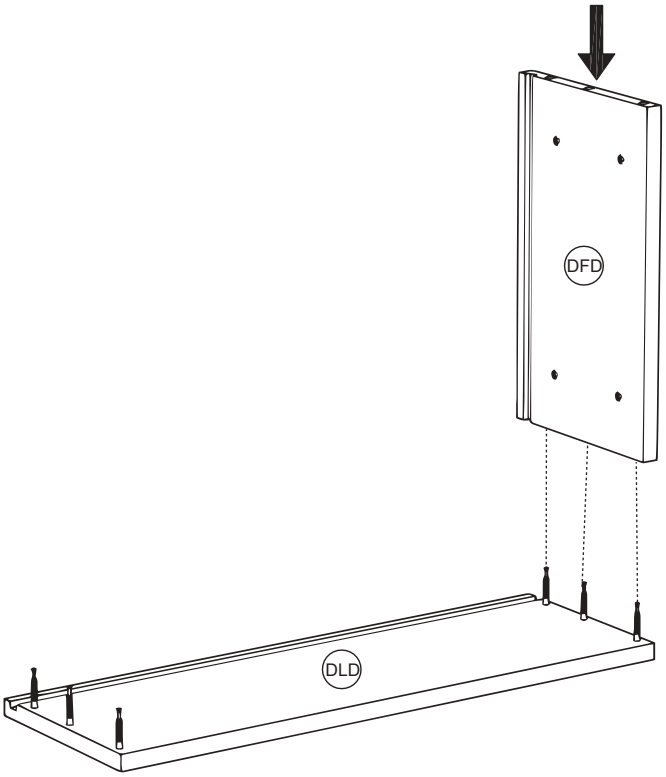

26

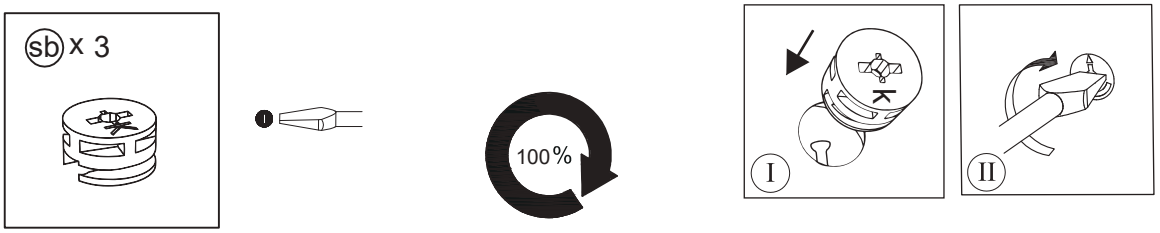

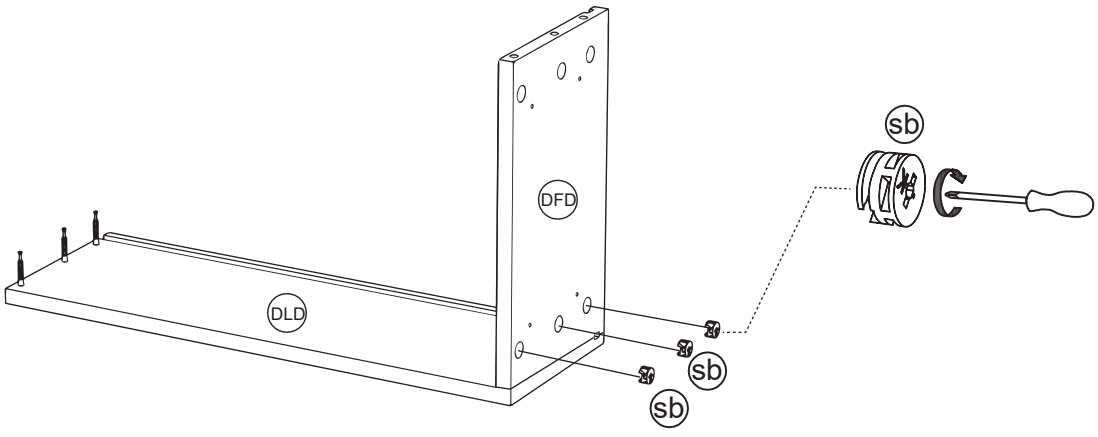

27

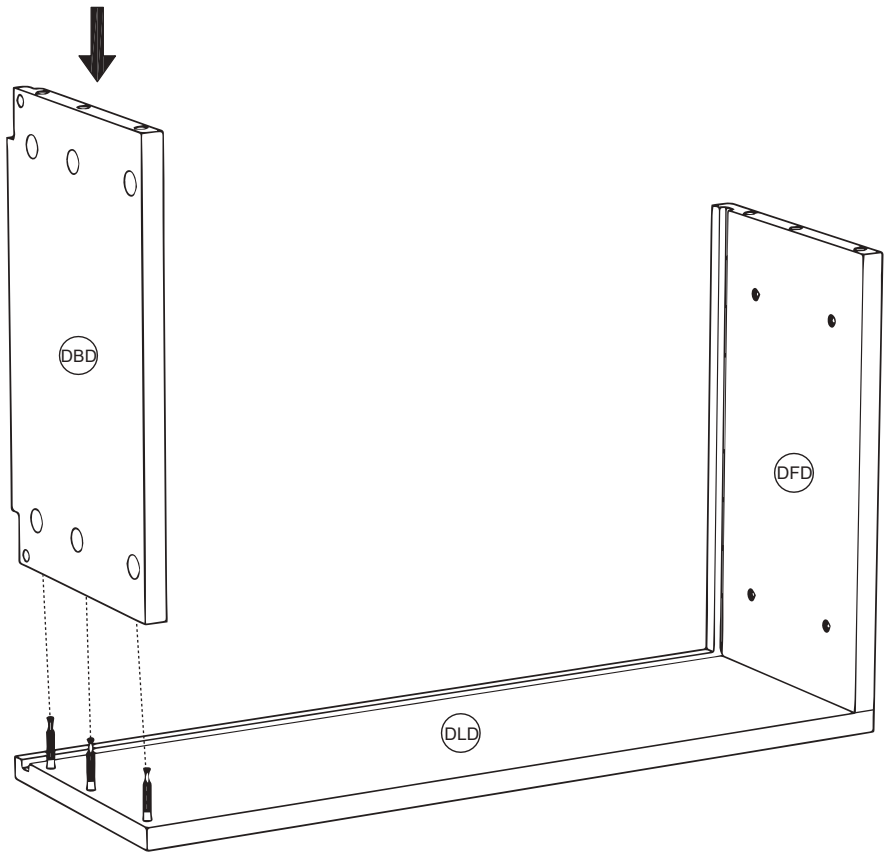

28

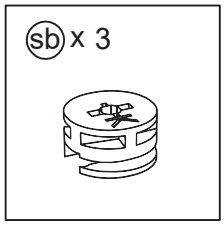





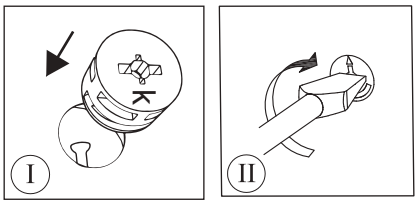

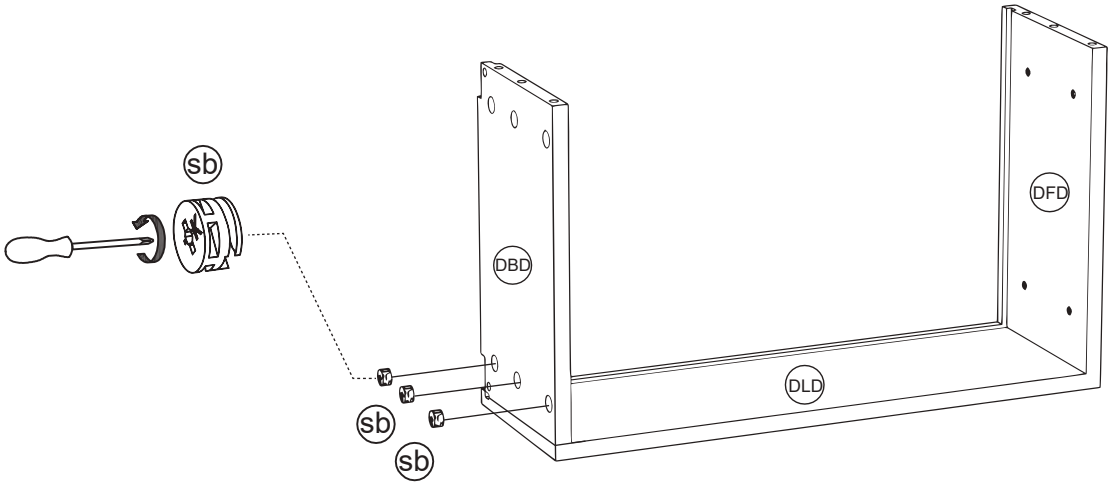

29

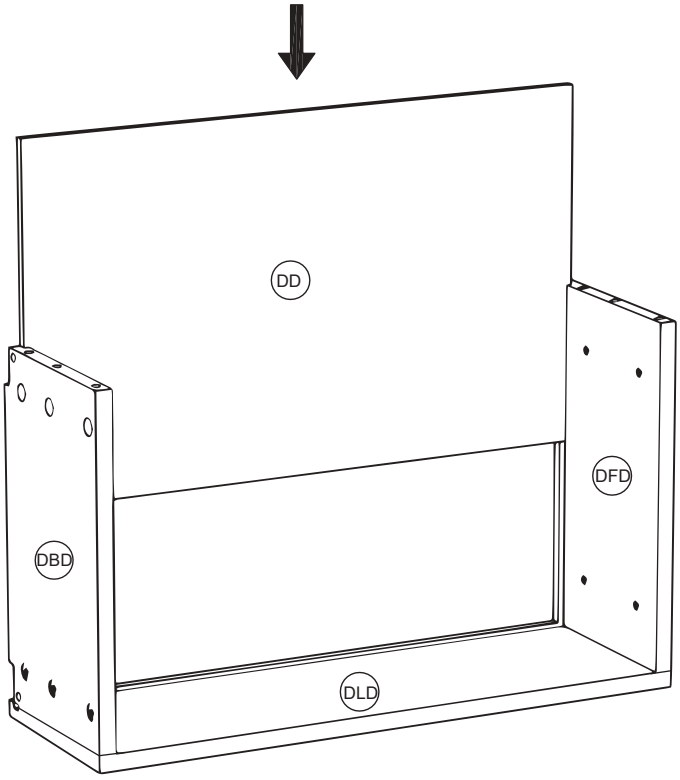

30

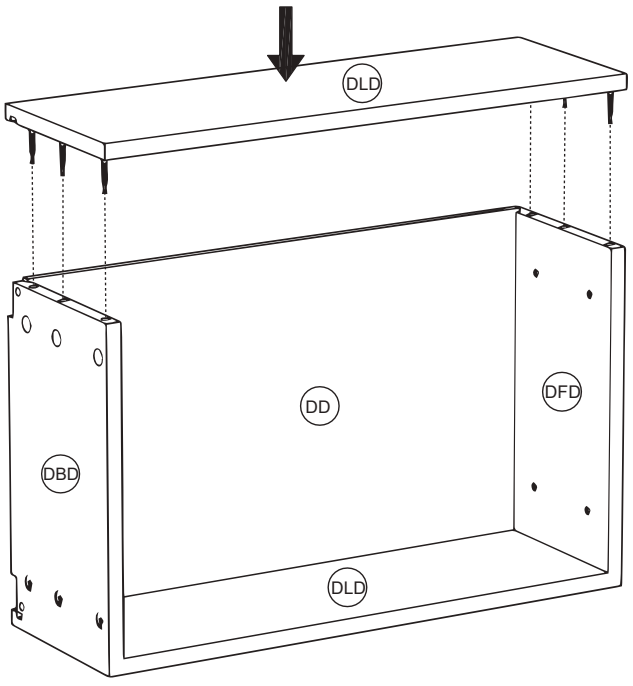

31

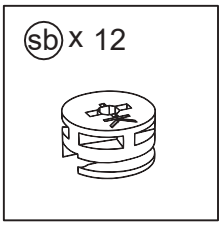
sb x 12


100%

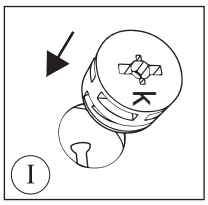
I
II

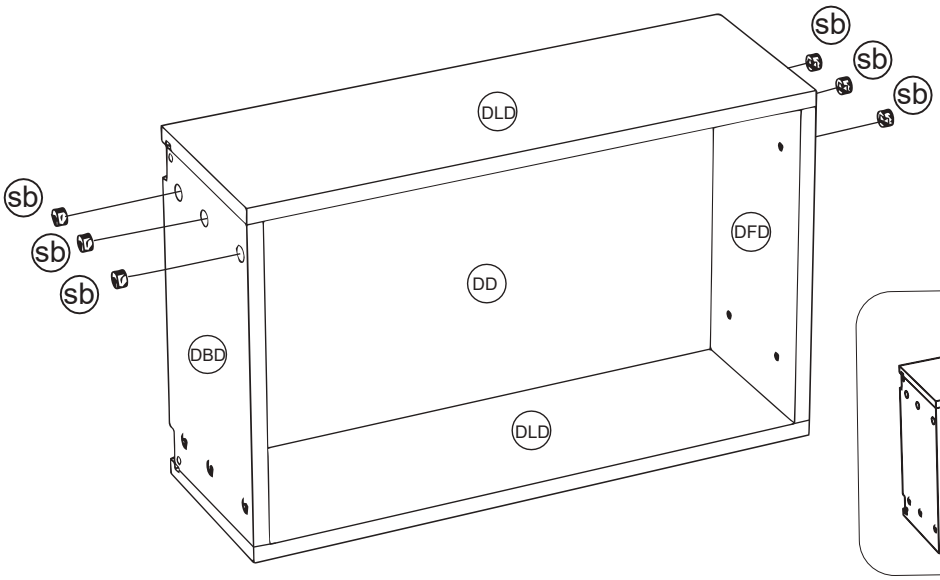
sb
sb
sb
sb
sb
sb
DLD
DFD
DD
DBD
DLD

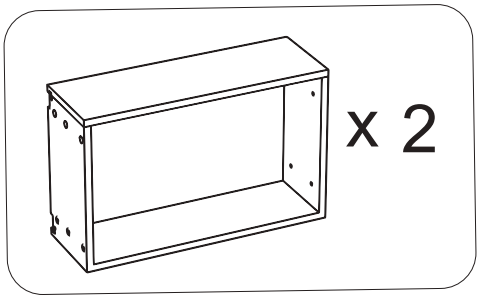
x 2

32

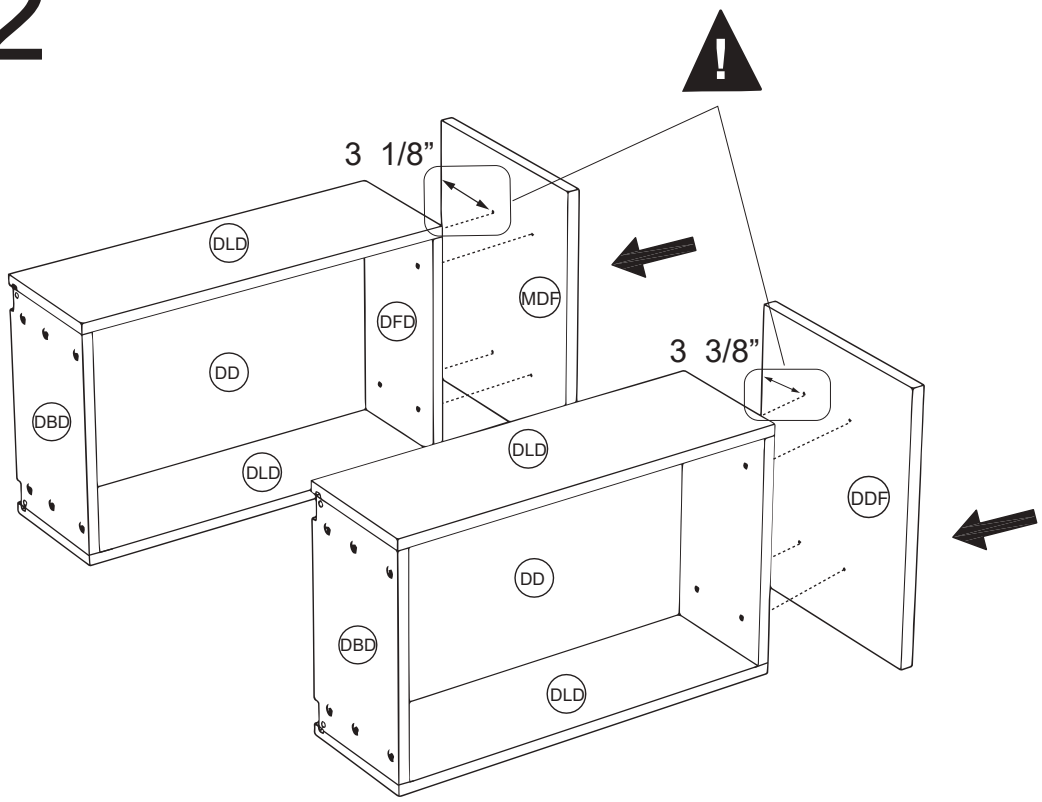
3 1/8”
3 3/8”
DLD
DFD
MDF
DD
DBD
DLD
DLD
DDF
DD
DBD
DLD

33

ⓖ x 4 DB12-DB18:×4
DB21-DB27:×6
DB30-DB36:×8

Φ4*25





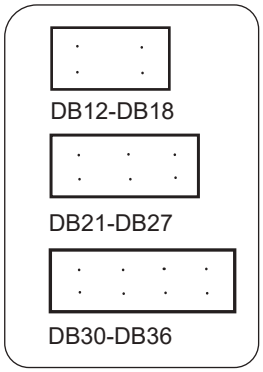

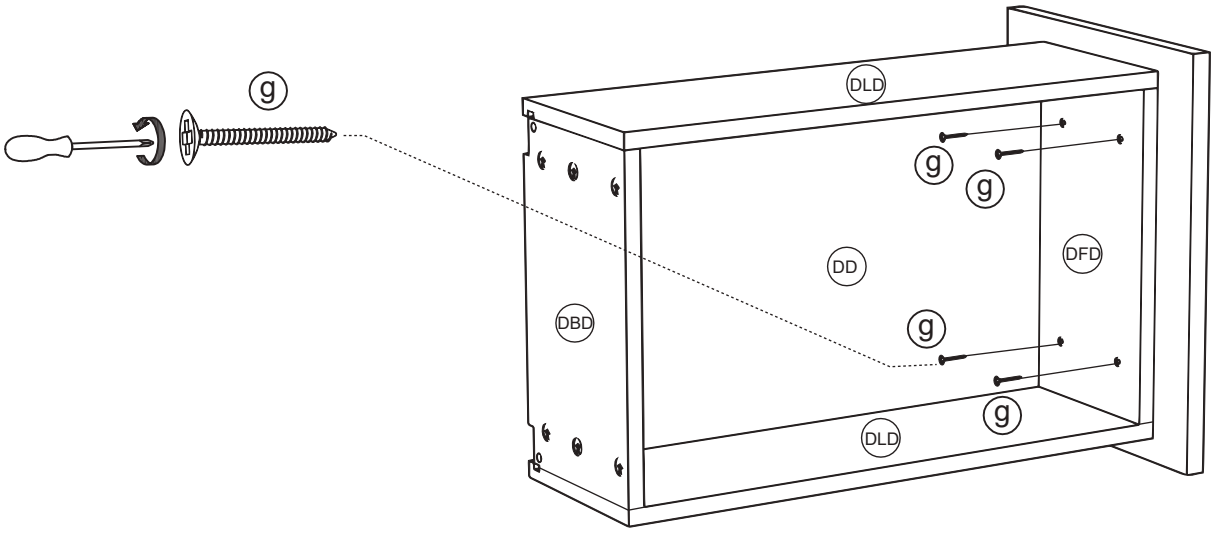

34

ⓙ x 1

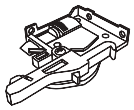

ⓡ x 1

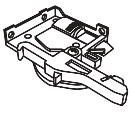

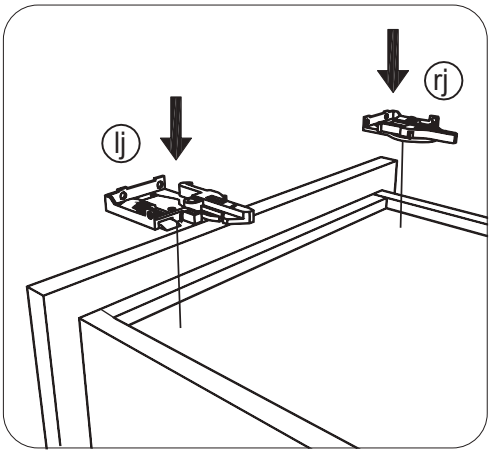

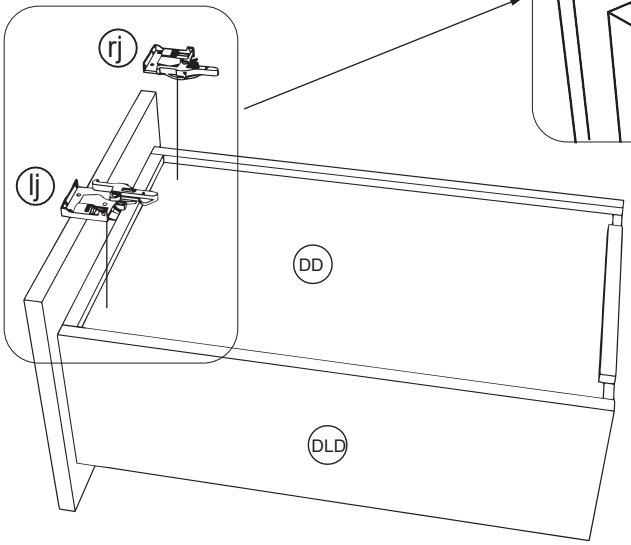

35

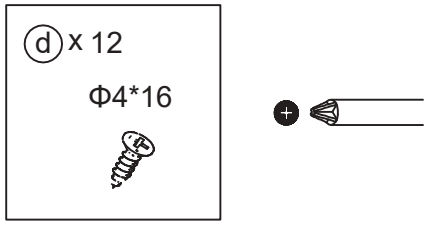

36

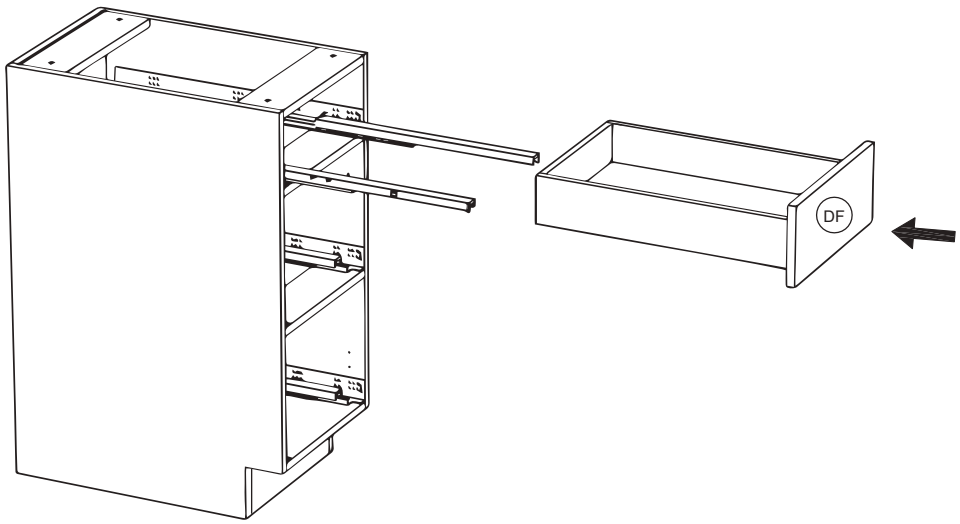

37

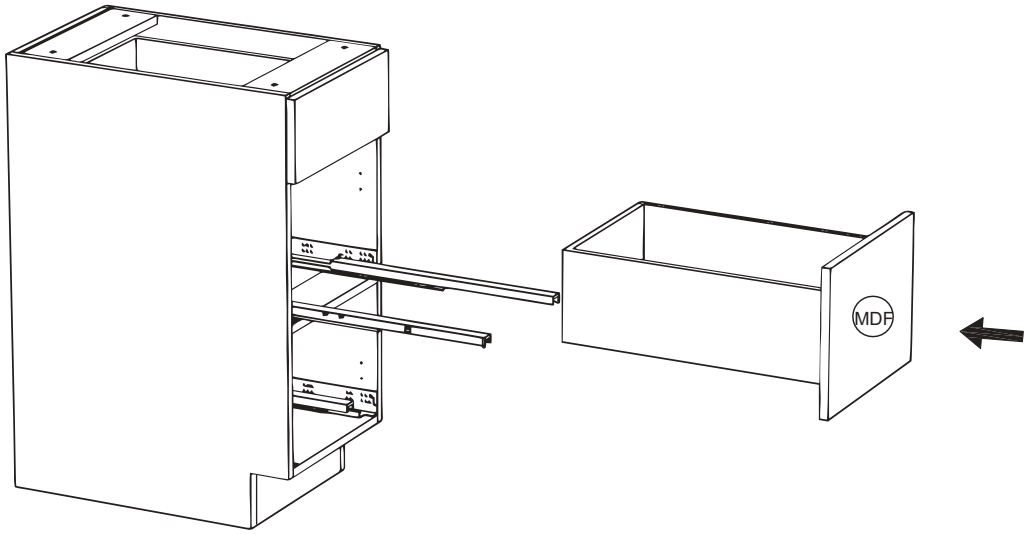

38

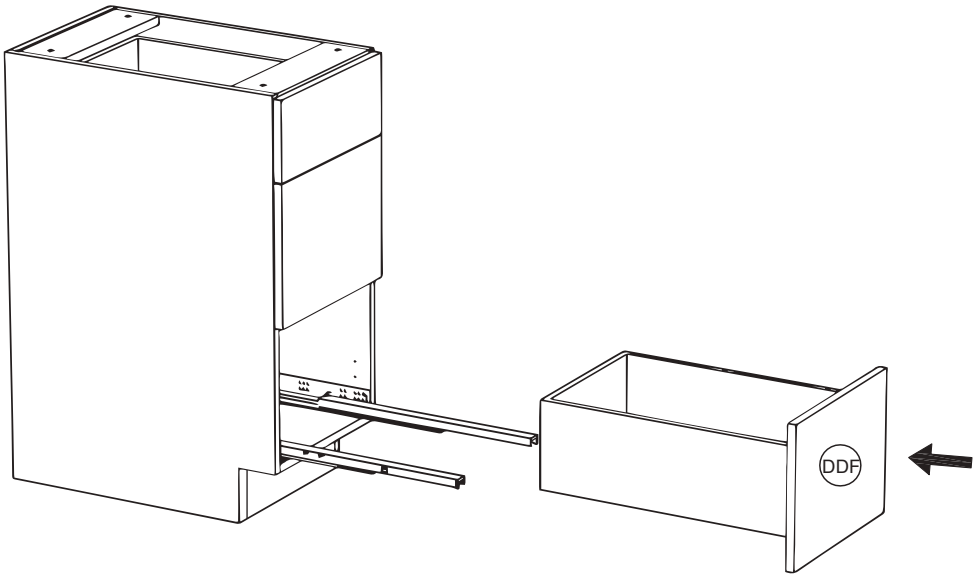

39

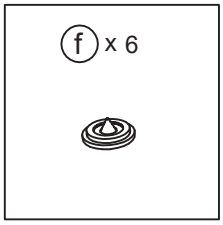

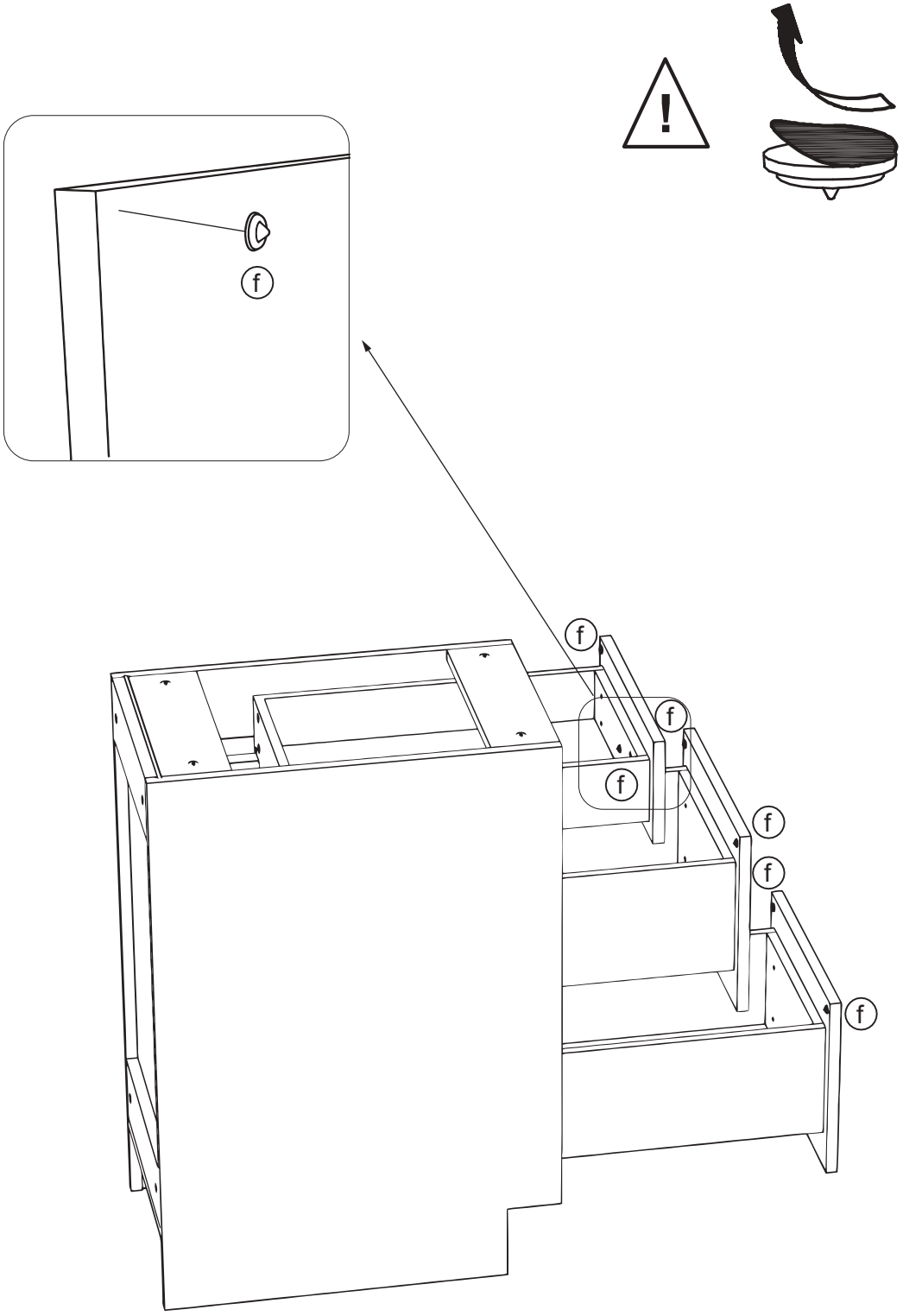

41

