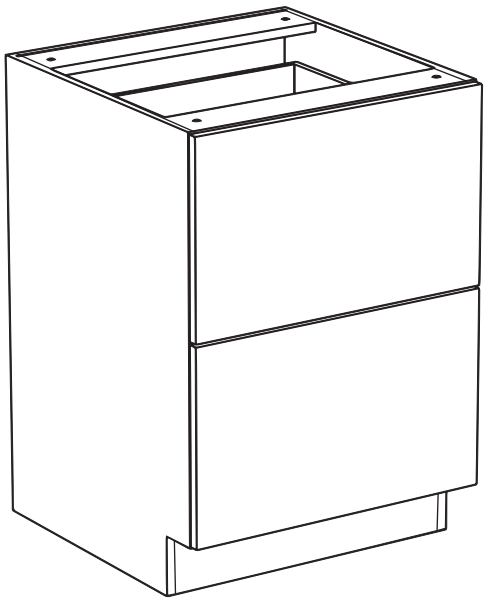

ASSEMBLY INSTRUCTION

DB24-2-DB36-2

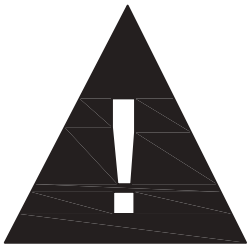

Warning: Excessive weight hazard!

Use two or more people to move, assemble, or install cabinets to avoid back injury. do not leave children unattended near cabinets. high risk of tipping if cabinets are installed incorrectly: securely attach cabinets to the wall to avoid serious injury.

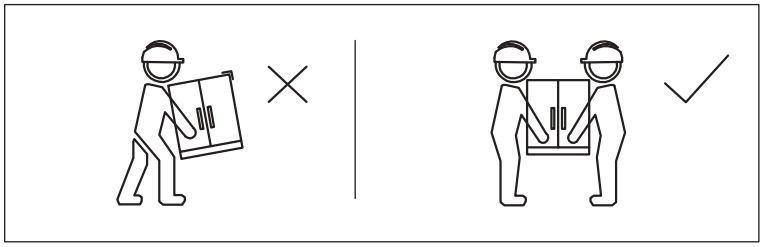

Safety and Care Advice

Important - Please read these instructions fully before starting assembly

• Check you have all the components and tools listed on the following pages.
• Remove all fittings from the plastic bags and separate them into their groups.
• Keep children and animals away from the work area, small parts could choke if swallowed.
• Make sure you heve enough space to layout the parts before starting.

• During assembly do not stand or put weight on the product. this could cause damage.
• Assemble the item as close to its final position (in Ihe same room) as possible.
• Assemble on a soft level surface to avoid damaging the unit or your floor.
• Parts of the assembly will be easier with 2 people .

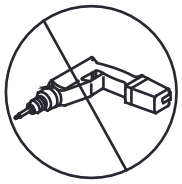

• Toreouce the likelihood of damaging your product please ensure that your power drill is set on a low torque setting.

Care and maintenance

• Only clean using a damp cloth and mild detergent, do no use bleach or abrasive cleaners.

• From time to time check that there are no loose screws on this unit.

• This product should not be discarded with household waste. Take to your local authority waste disposal centre,

Handy Hints

• Assemble all parts and bolts loosely during assembly, only once the product is complete should you fully tighten the bolts

•Regularly check and ensure that all bolts and fittings are tightend properly,

WARNING

In order to help prevent overturning -
please follow these instructions

To prolong wear & tear and avoid damaging the product,
please follow the suggestions below:

- Avoid putting excessive weights inside the drawers.
- Do not push or lean force onto the doors while opened.
- Remove excessive water or liquid from the product as soon as possible.
- Painted doors should not be cleaned with soluble cleaners;
all benzene and resin solvents are not suitable for use as panel cleaning agents.

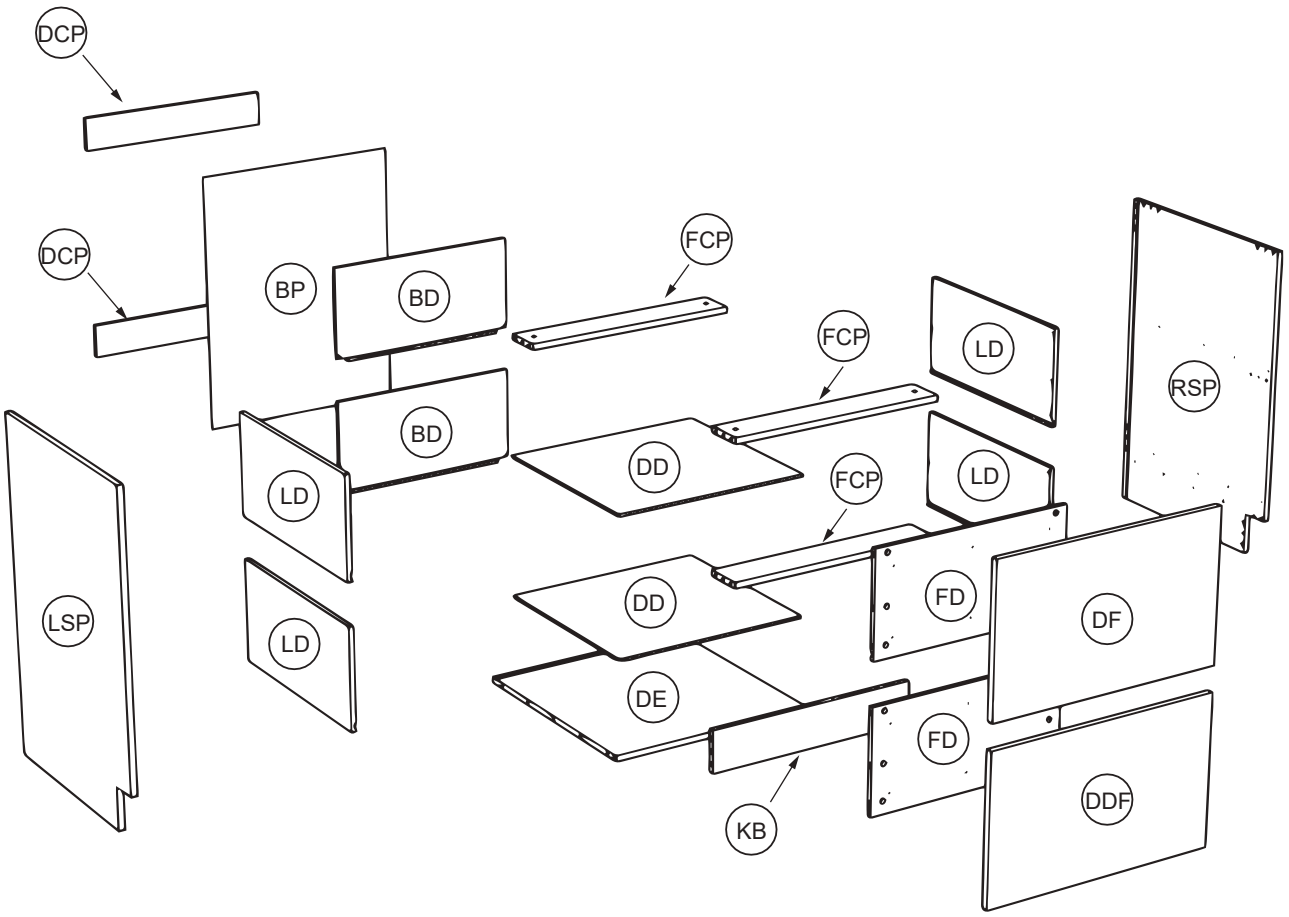
DCP
DCP
BP
BD
FCP
FCP
LD
RSP
BD
DD
LD
LD
FCP
LD
LSP
DD
FD
DF
LD
DE
FD
DDF
KB

PRODUCT PARTS

LSP	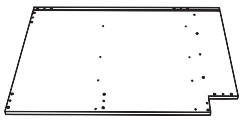 1PC(S)	RSP	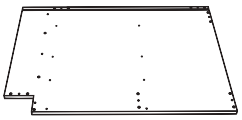 1PC(S)	DE	 1PC(S)
FCP	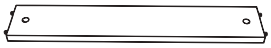 4PC(S)	DCP	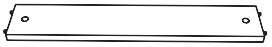 2PC(S)	BP	 1PC(S)
KB	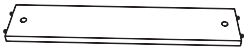 1PC(S)	DF	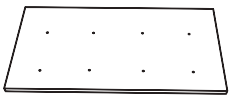 DB30-2——DB36-2 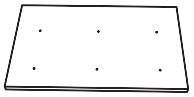 DB24-2——DB27-2 1PC(S)	DDF	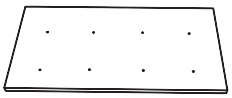 DB30-2——DB36-2 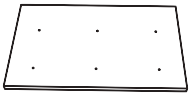 DB24-2——DB27-2 1PC(S)
LD	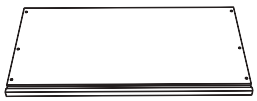 4PC(S)	BD	 2PC(S)	DD	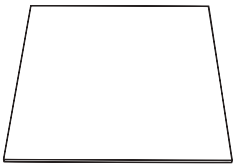 2PC(S)
FD	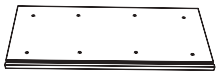 DB30-2——DB36-2  DB24-2——DB27-2 2PC(S)				

INCLUDED HARDWARE

ⓐ x 18 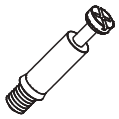	ⓑ x 18 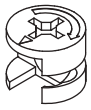	ⓓ x 28 Φ4*16 	ⓕ x 4 	ⓖ DB21-2—DB27-2:×12 DB30-2—DB36-2:×16 Φ4*25 
ⓛⓗ x 2 	ⓡⓗ x 2 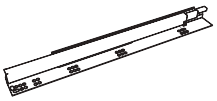	ⓛⓙ x 2 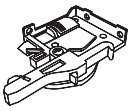	ⓡⓙ x 2 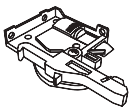	ⓢⓐ x 24 
ⓢⓑ x 24 				

RECOMMENDED TOOLS

SCREWDRIVER	DRILL	RUBBER MALLET	GLUE
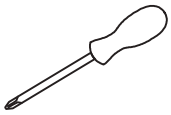	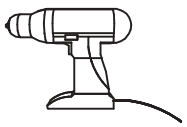		

1

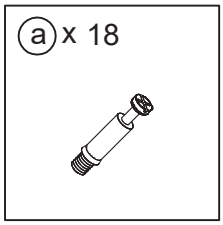

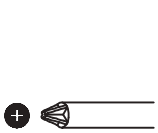

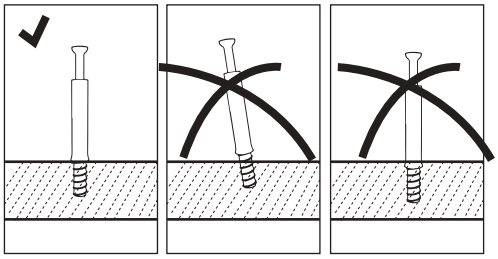

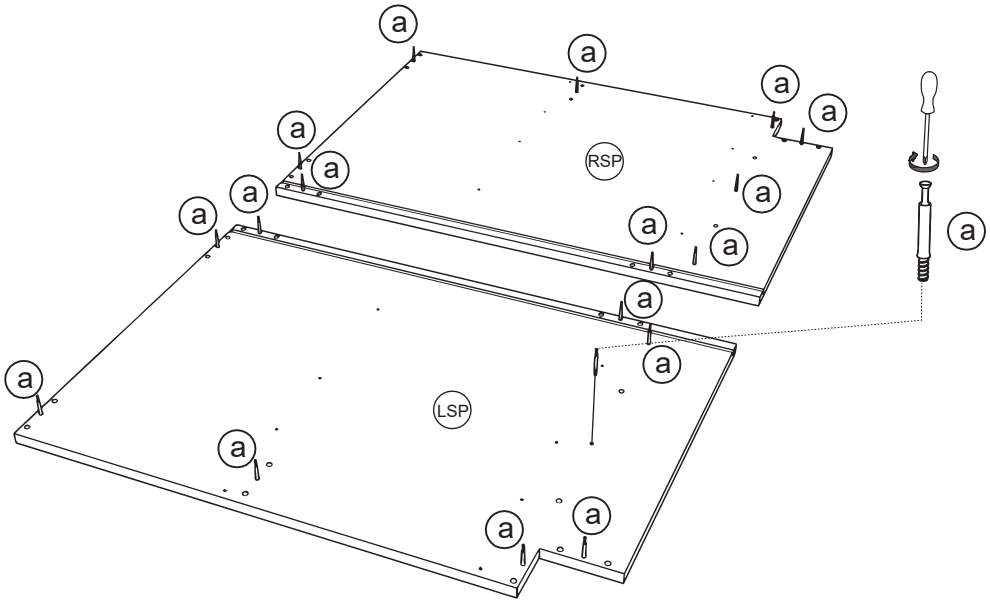

2

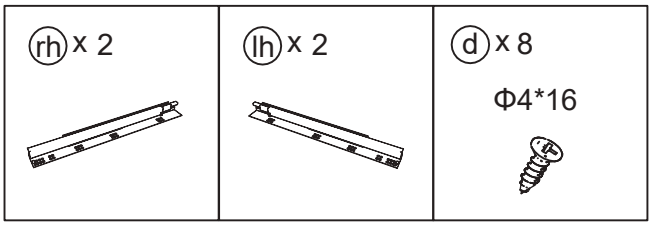



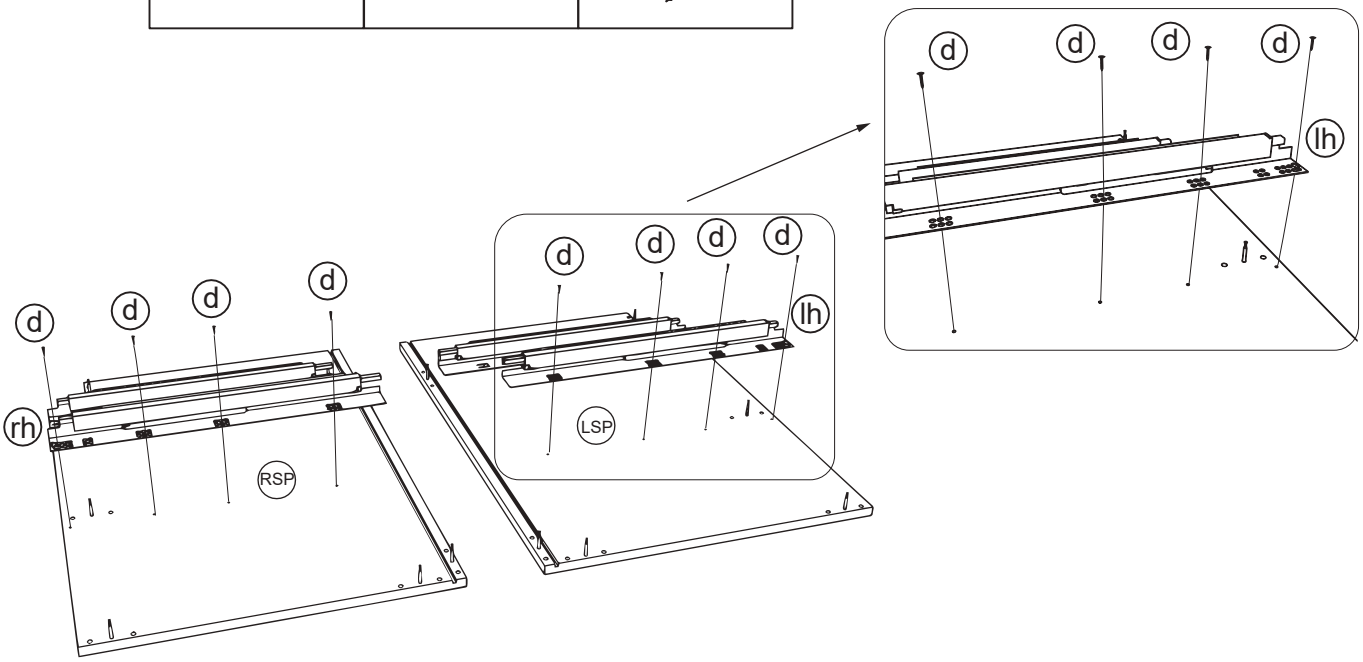

3

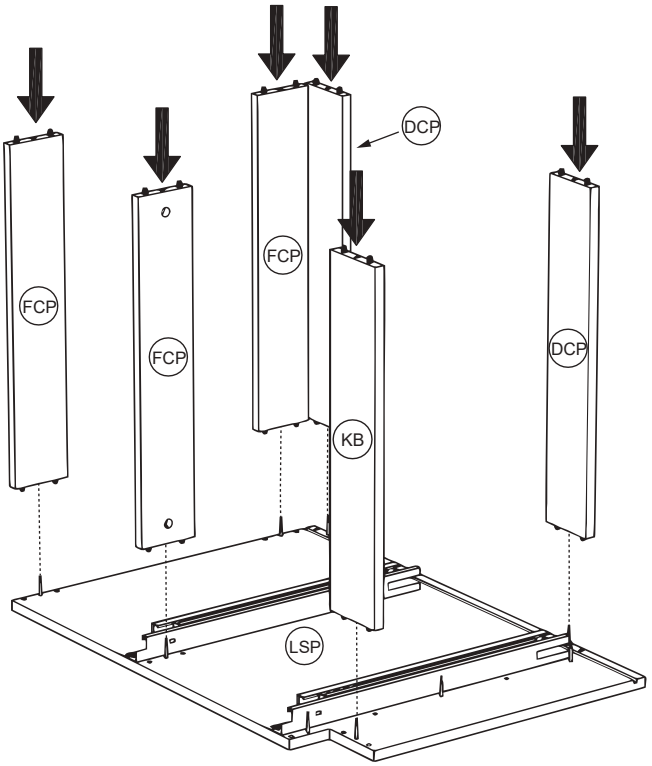
DCP
FCP
FCP
FCP
KB
DCP
LSP

4

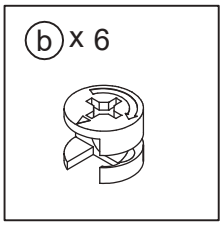
b x 6

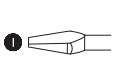


100%

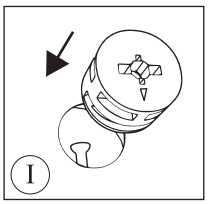
I

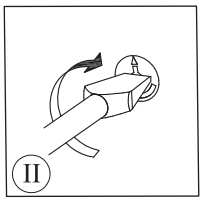
II

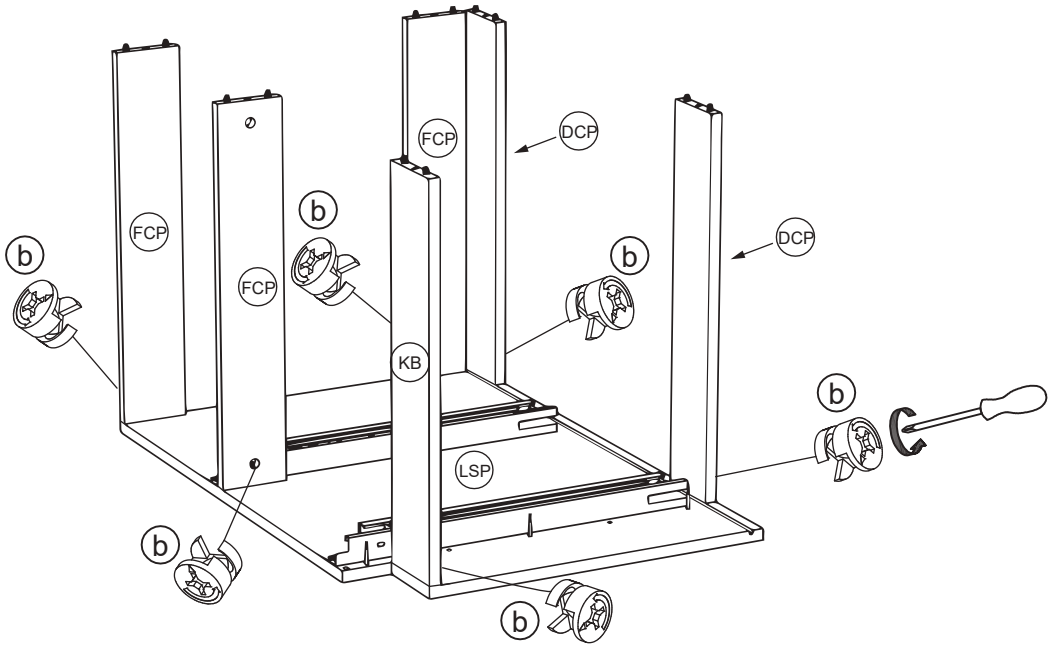
FCP
DCP
FCP
b
b
FCP
DCP
b
KB
b
LSP
b
b

5

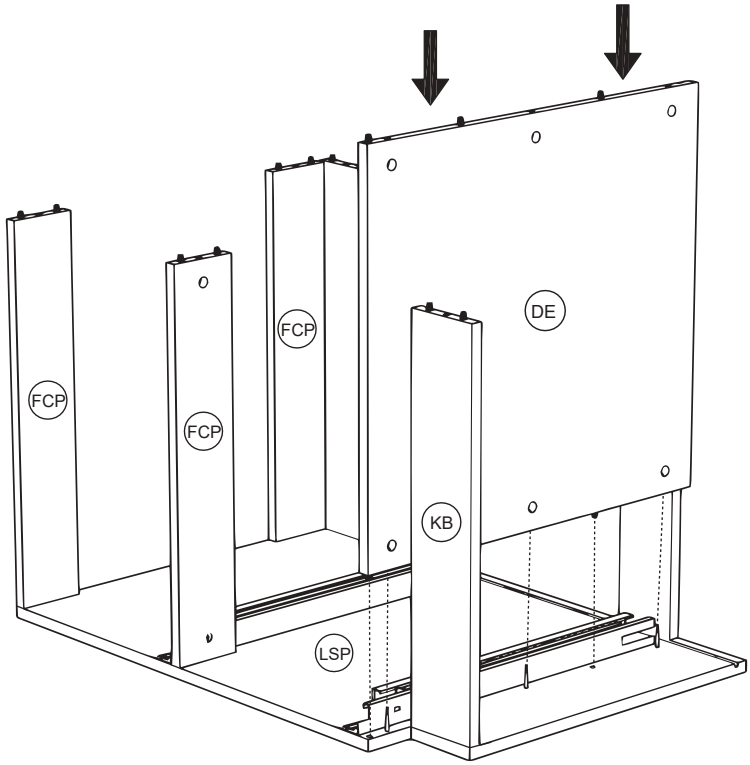

6

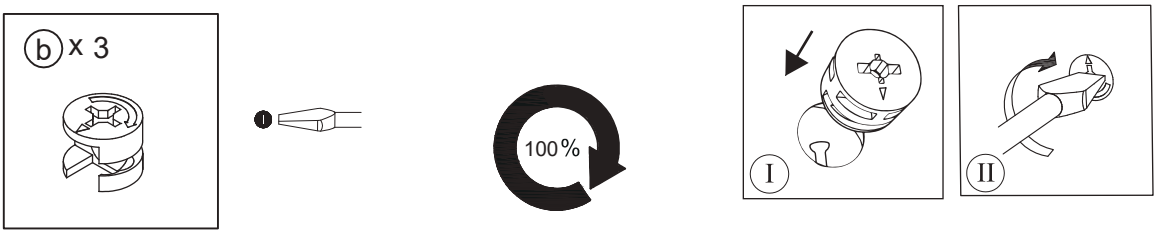

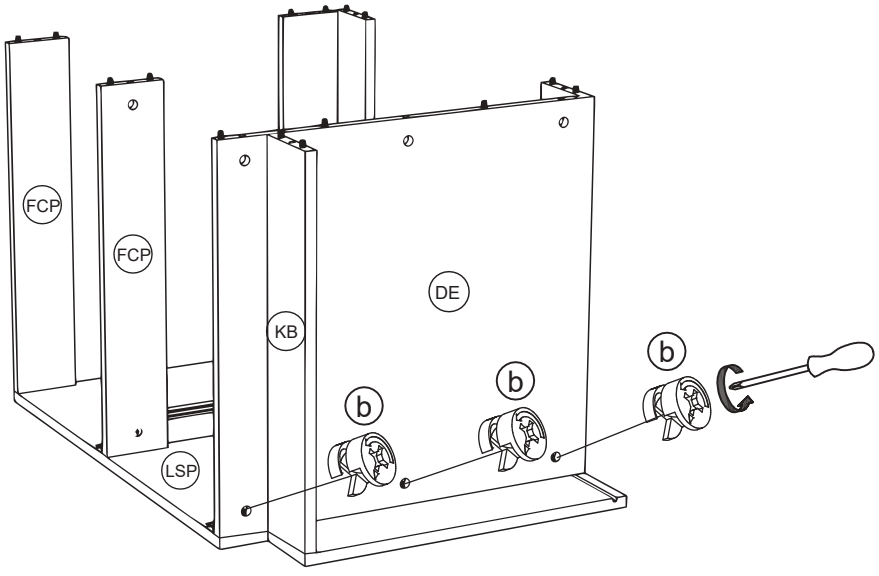

7

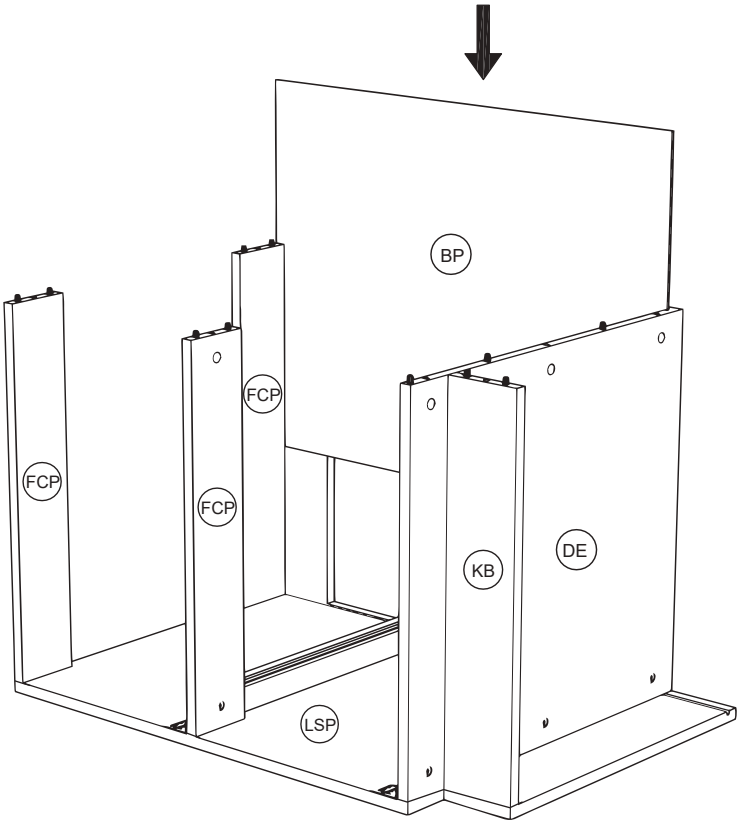

8

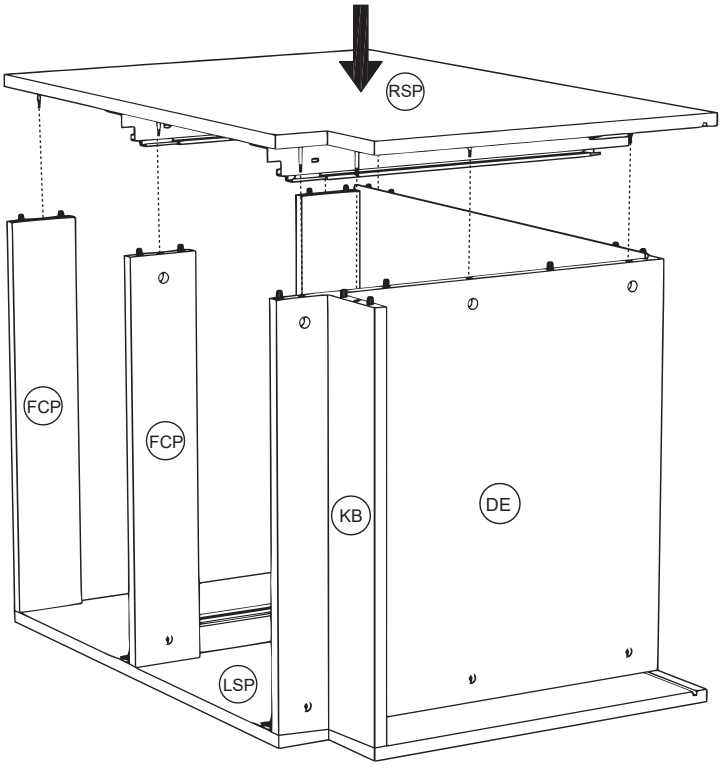

9

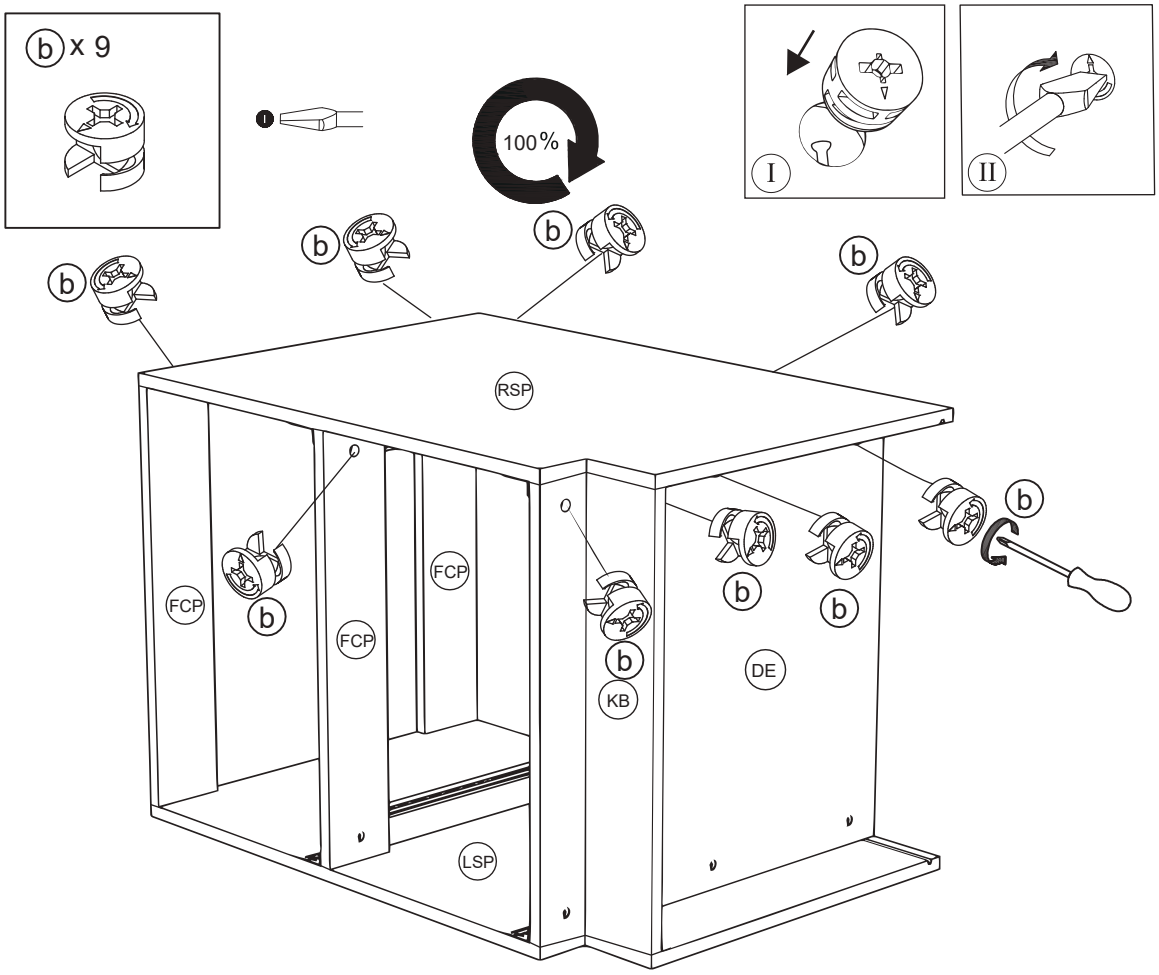

10

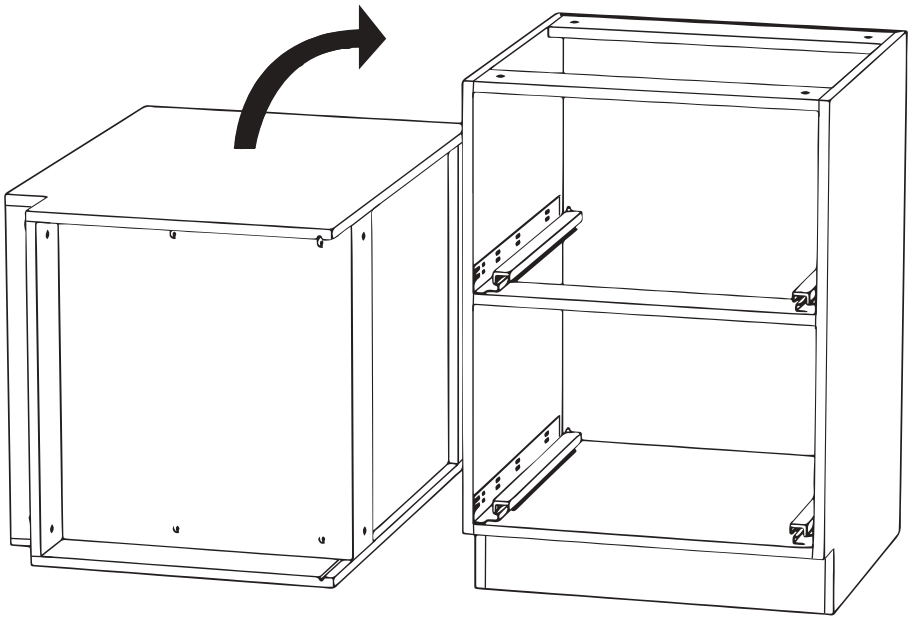

11

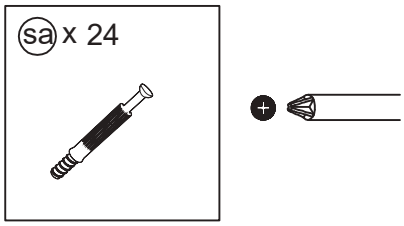

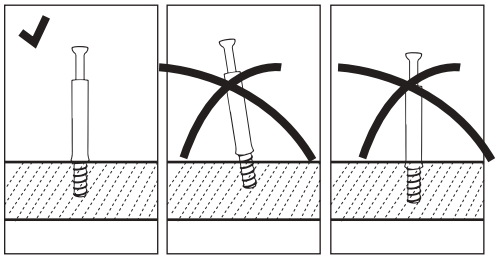

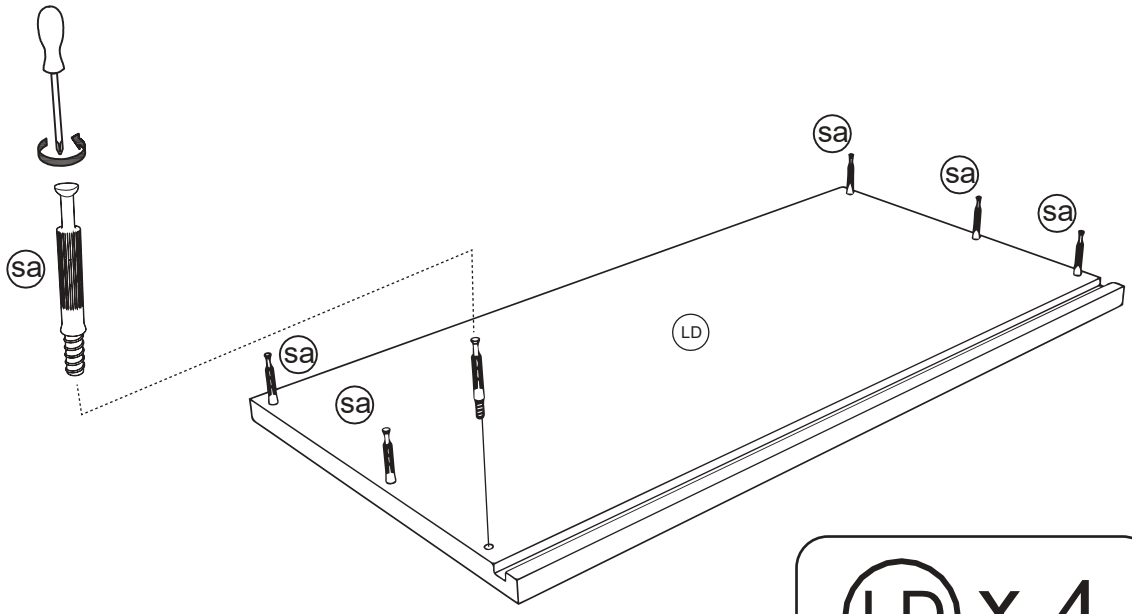

LD x 4

12

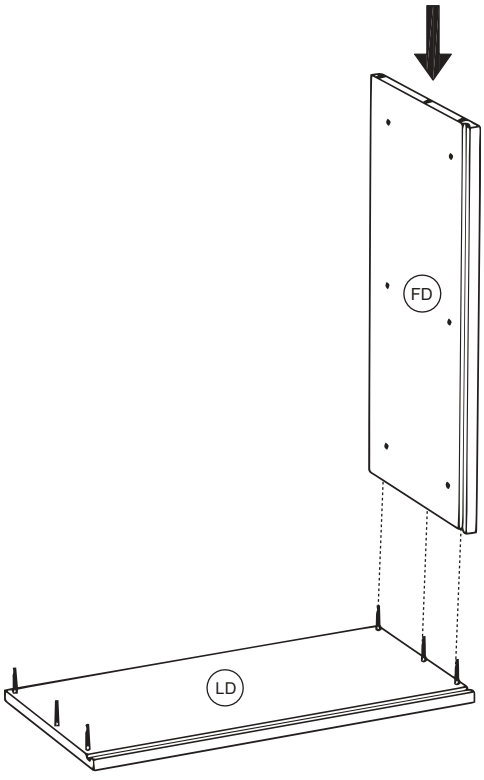

13

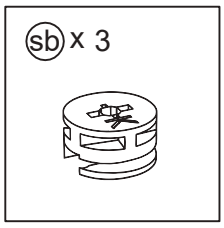

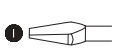



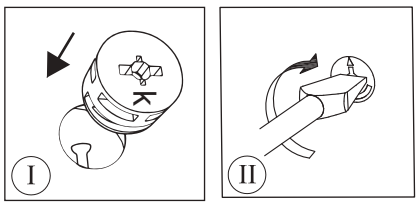

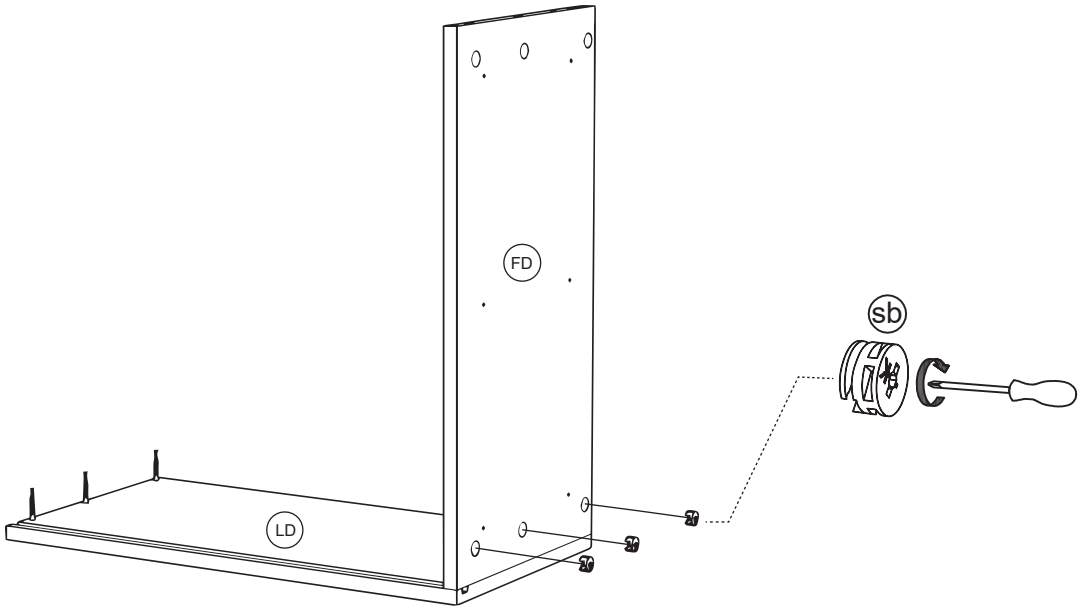

14

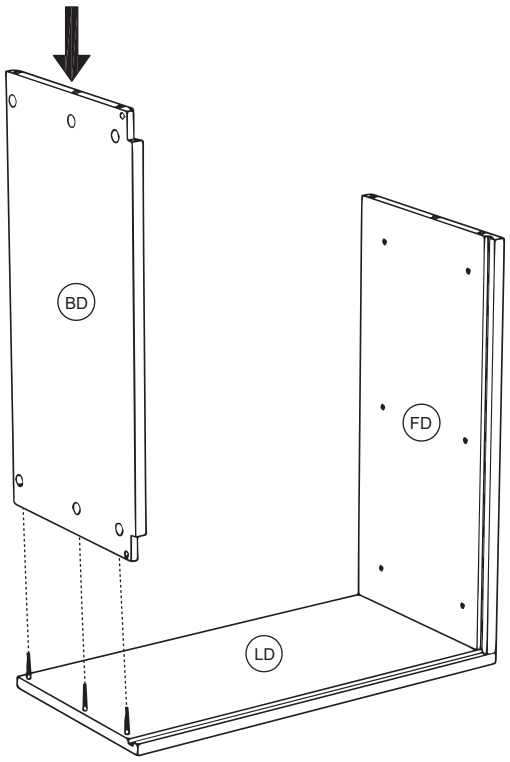

15

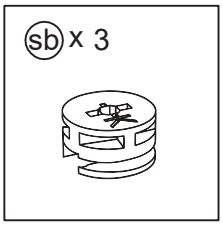





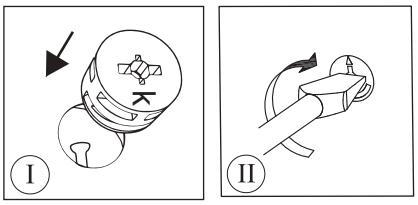

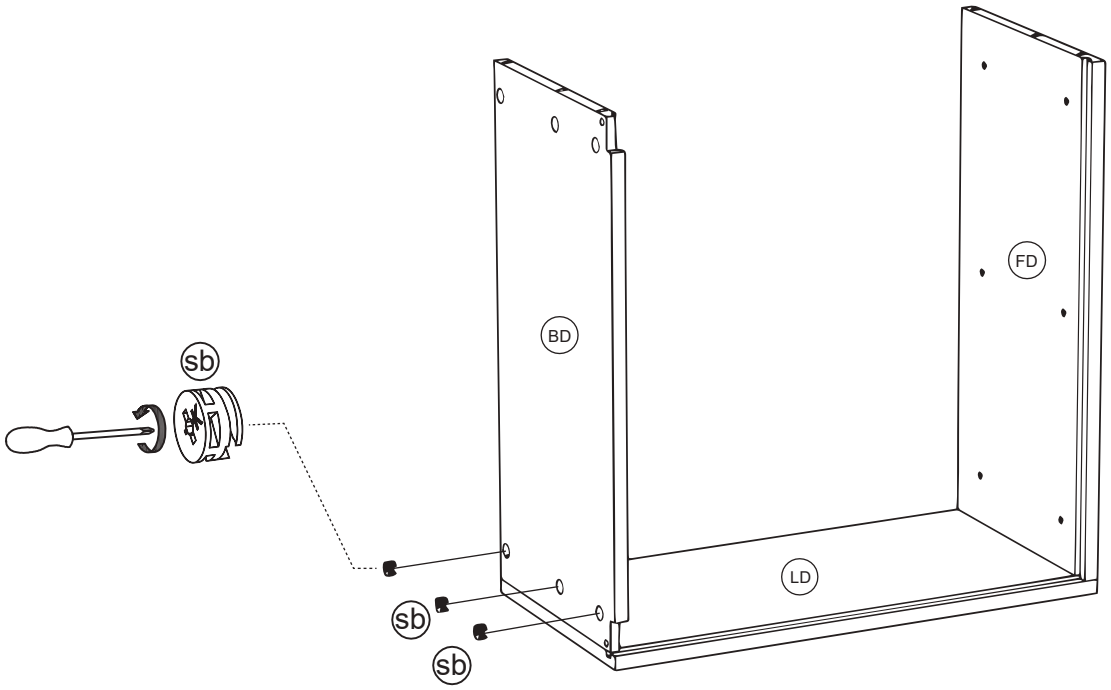

16

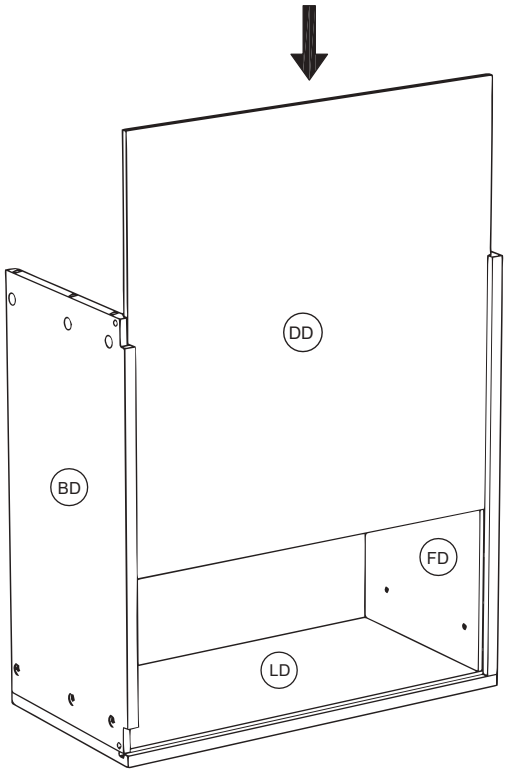

17

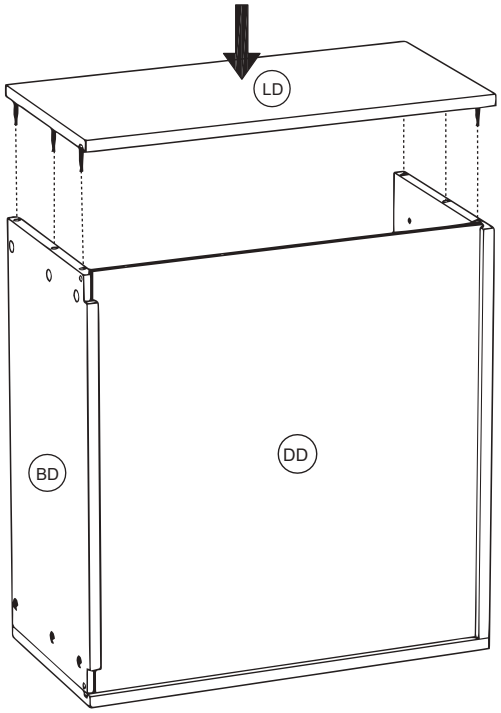

18

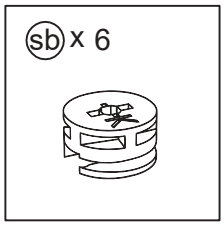

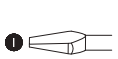



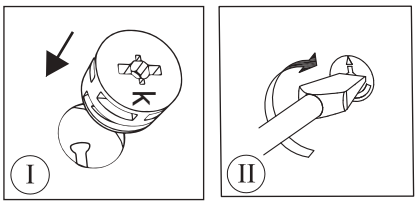

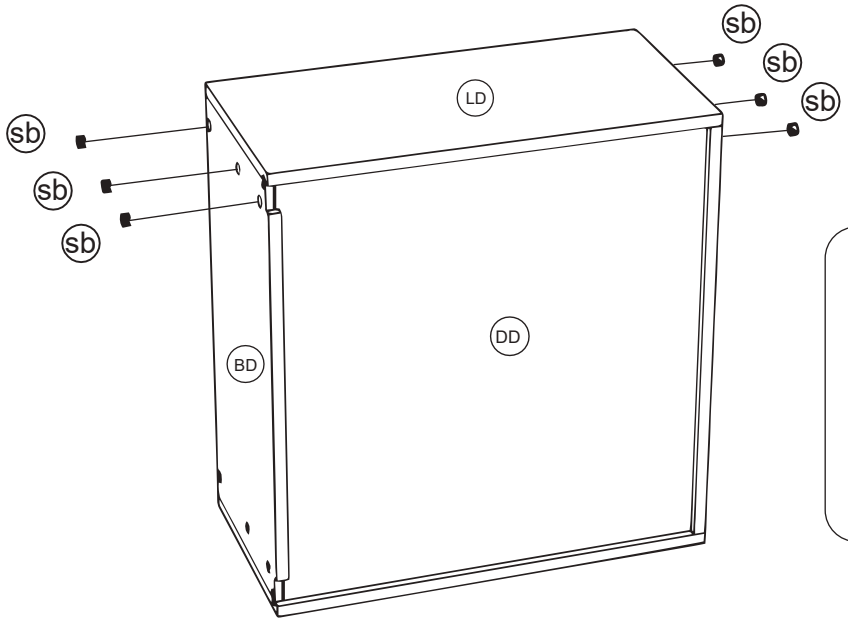

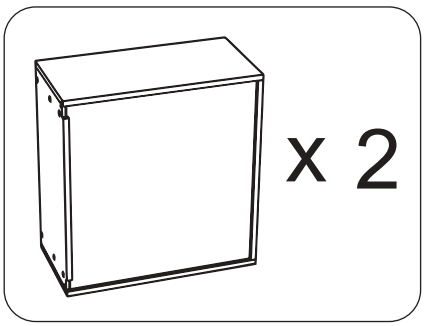

19

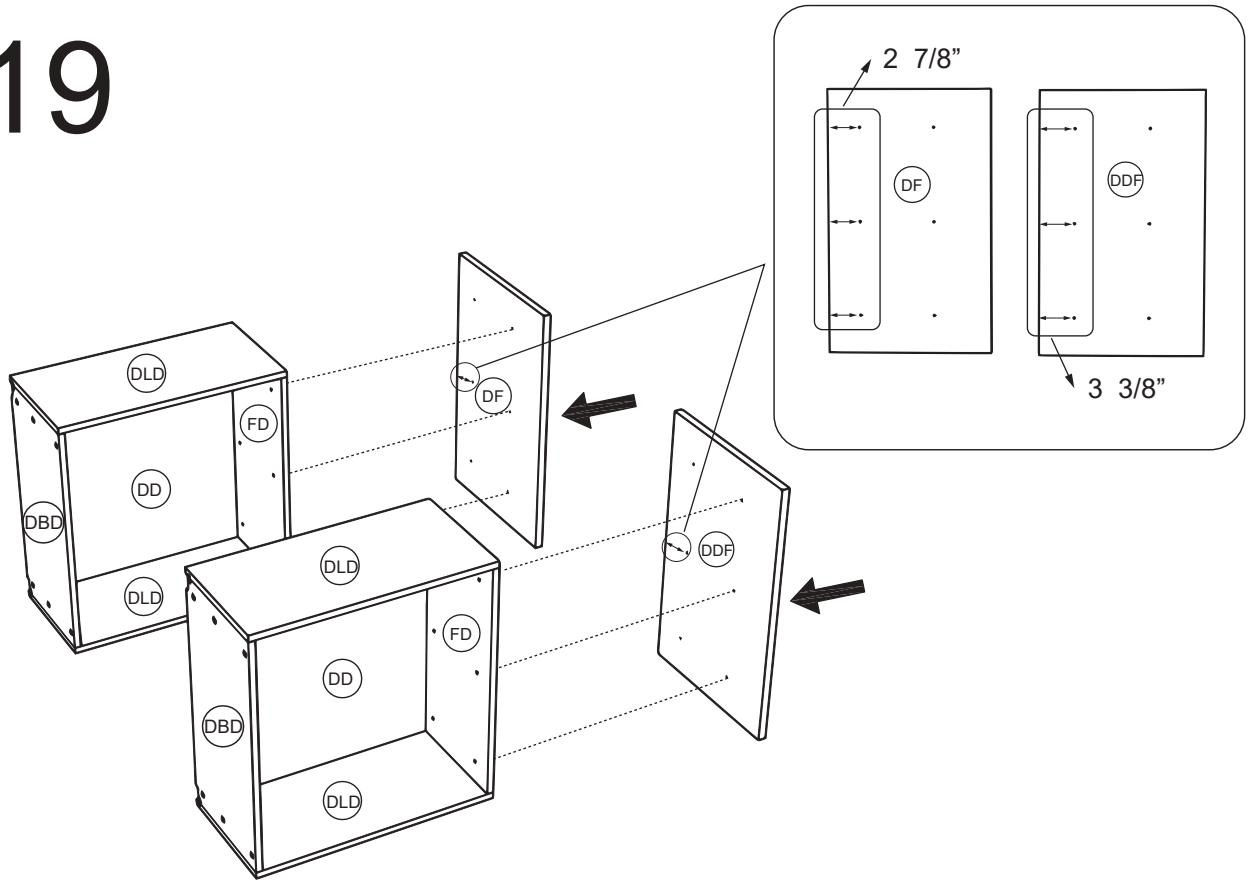

20

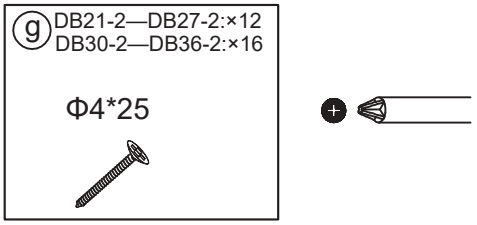

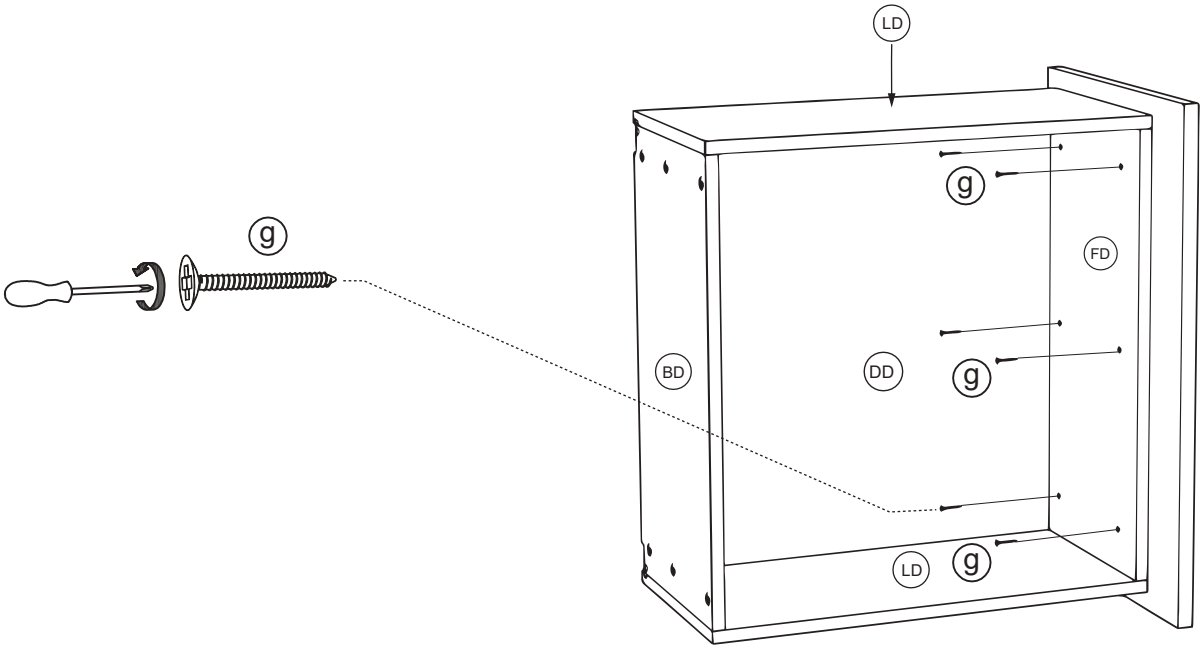

（DB21-2—DB27-2:×12）

21

lj x 2

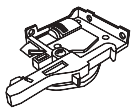

rj x 2

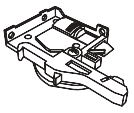

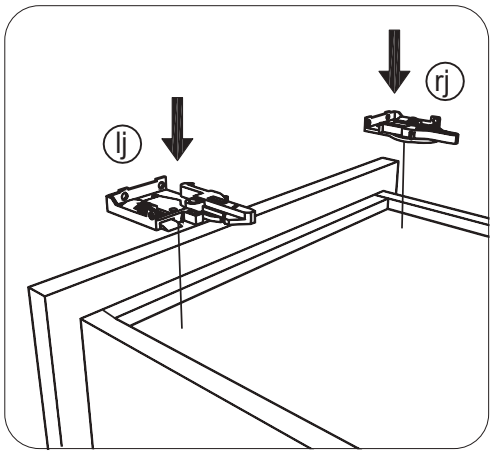

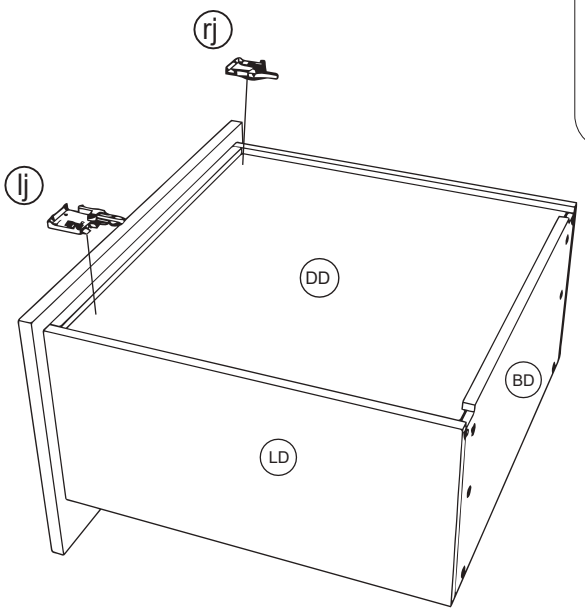

×2

22

d x 12

Φ4*16

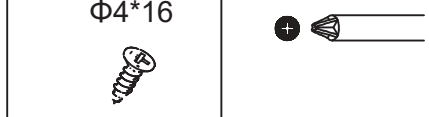

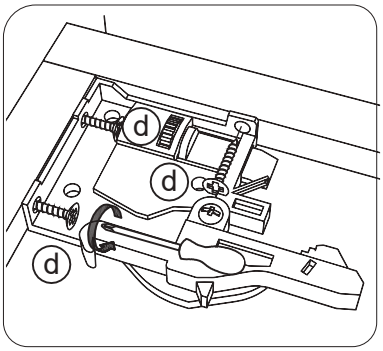

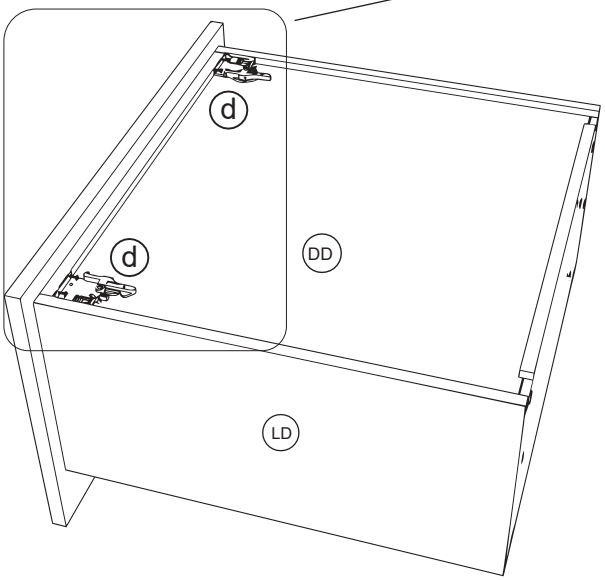

×2

23

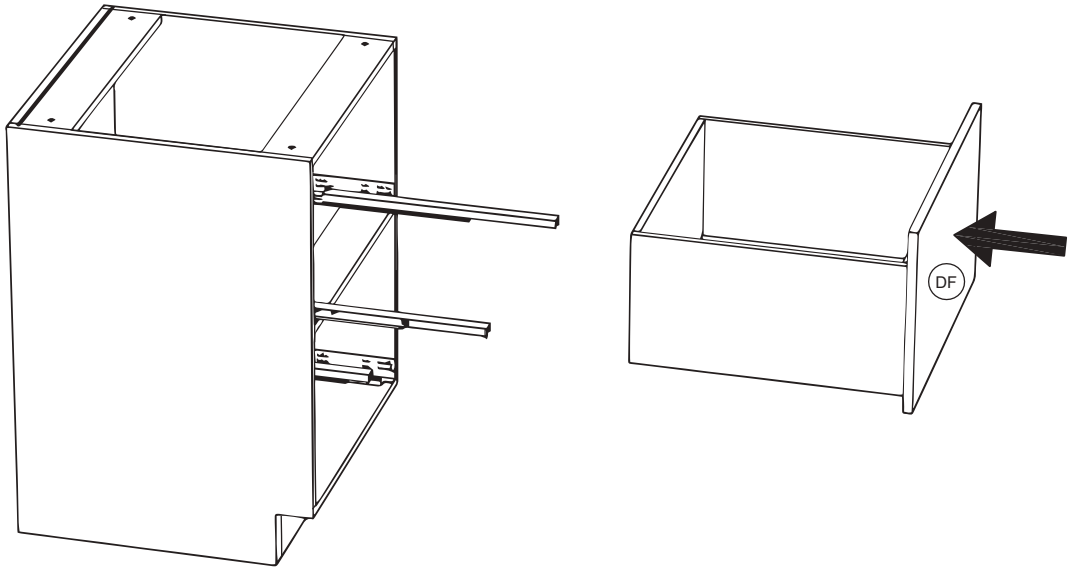

24

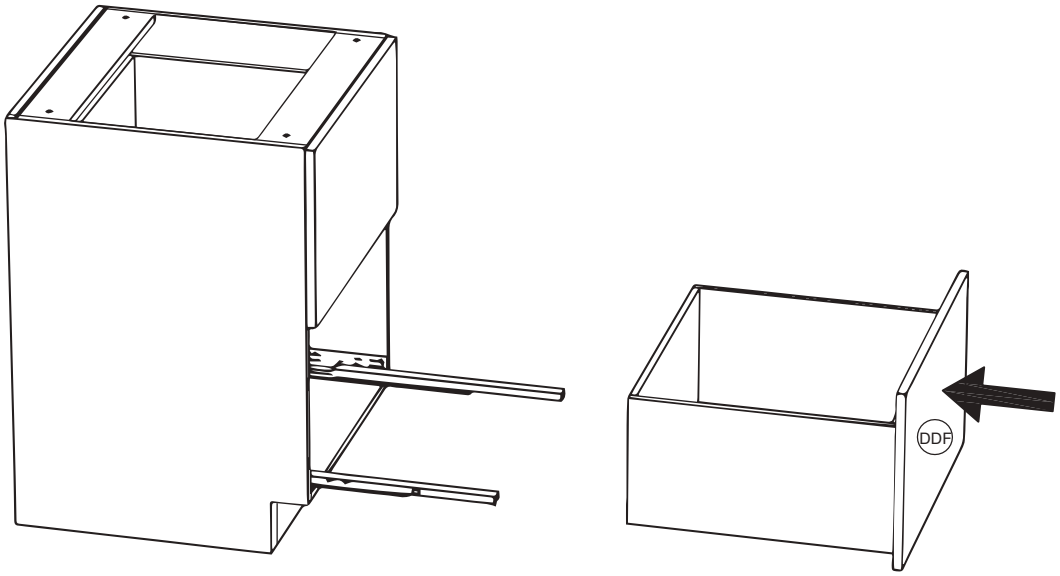

25

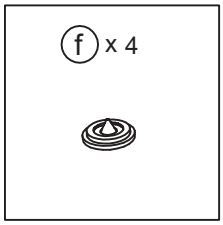



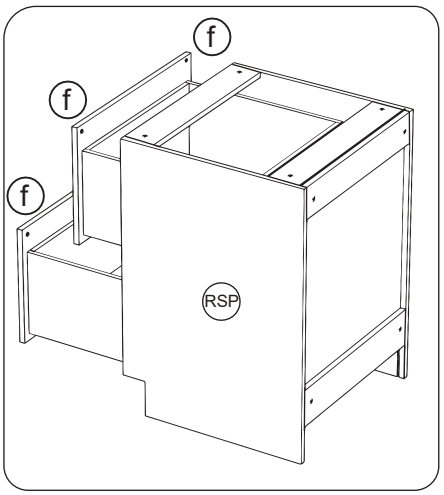

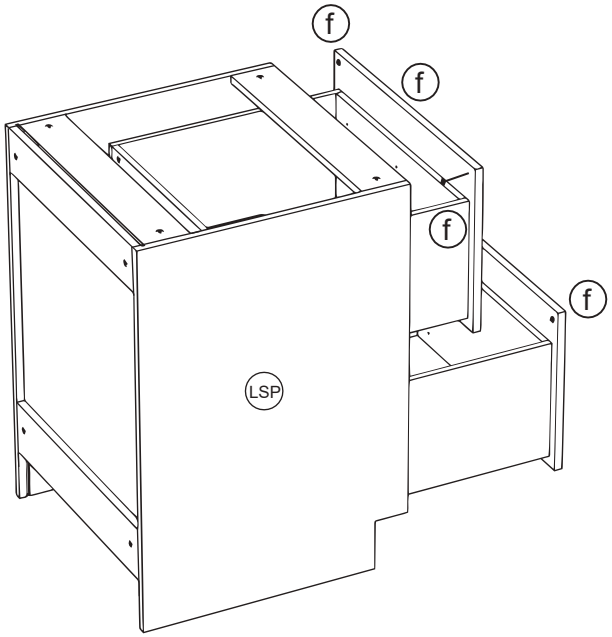

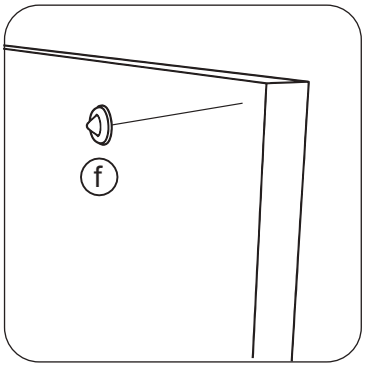

26

