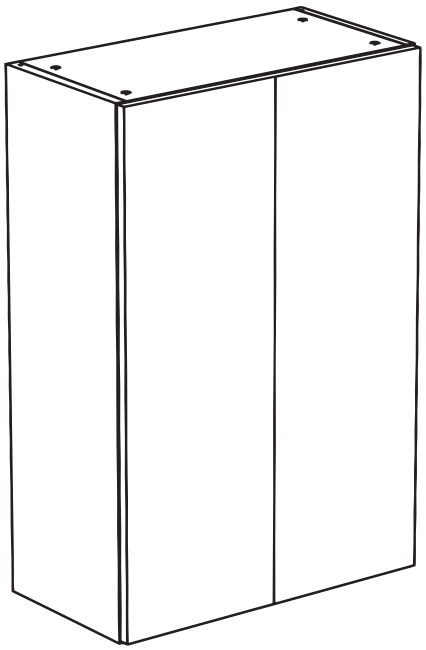

ASSEMBLY INSTRUCTION

W2436-W4536

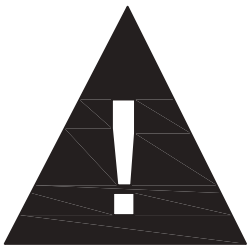

Warning: Excess ive weight ha zard!

Use two or more people to move, assemble, or install cabinets to avoid back injury. do not leave children unattended near cabinets. high risk of tipping if cabinets are installed incorrectly: securely attach cabinets to the wall to avoid serious injury.

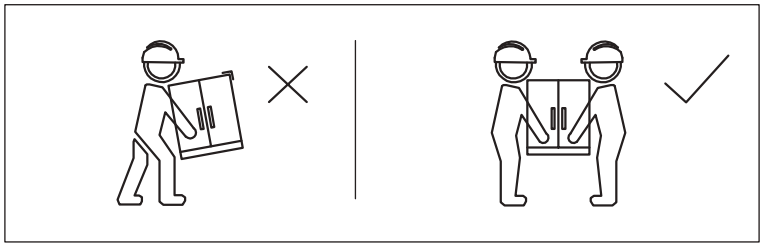

Safety and Care Advice

Important - Please read these instructions fully before starting assembly

• Check you have all the components and tools listed on the following pages.
• Remove all fittings from the plastic bags and separate them into their groups.
• Keep children and animals away from the work area, small parts could choke if swallowed.
• Make sure you heve enough space to layout the parts before starting.

• During assembly do not stand or put weight on the product. this could cause damage.
• Assemble the item as close to its final position (in Ihe same room) as possible.
• Assemble on a soft level surface to avoid damaging the unit or your floor.
• Parts of the assembly will be easier with 2 people .

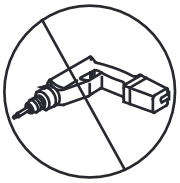

• Toreouce the likelihood of damaging your product please ensure that your power drill is set on a low torque setting.

Care and maintenance

• Only clean using a damp cloth and mild detergent, do no use bleach or abrasive cleaners.

• From time to time check that there are no loose screws on this unit.

• This product should not be discarded with household waste. Take to your local authority waste disposal centre,

Handy Hints

• Assemble all parts and bolts loosely during assembly, only once the product is complete should you fully tighten the bolts

•Regularly check and ensure that all bolts and fittings are tightend properly,

WARNING

In order to help prevent overturning -
please follow these instructions

To prolong wear & tear and avoid damaging the product,
please follow the suggestions below:

- Avoid putting excessive weights inside the drawers.
- Do not push or lean force onto the doors while opened.
- Remove excessive water or liquid from the product as soon as possible.
- Painted doors should not be cleaned with soluble cleaners;
all benzene and resin solvents are not suitable for use as panel cleaning agents.

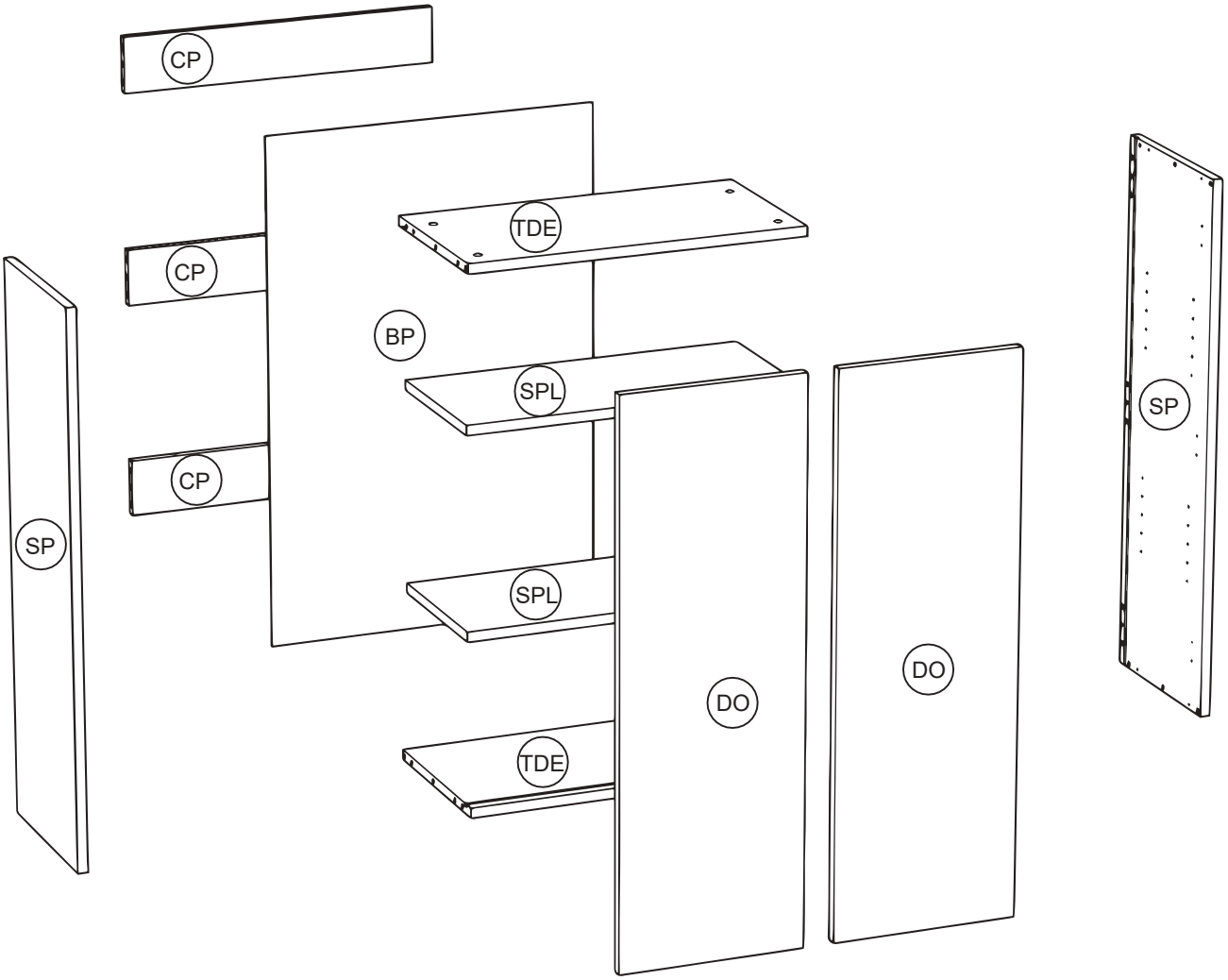
CP
CP
CP
SP
TDE
BP
SPL
SPL
TDE
DO
DO
SP

PRODUCT PARTS

DO	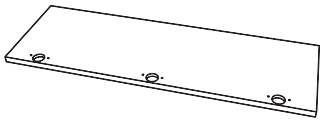	SP	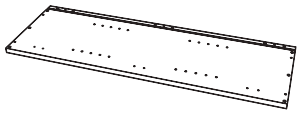	BP	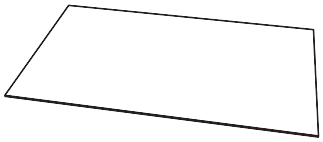
	2PC(S)		2PC(S)		1PC(S)
TDE	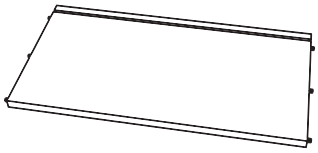	SPL	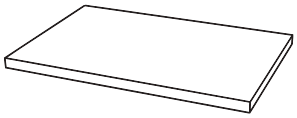	CP	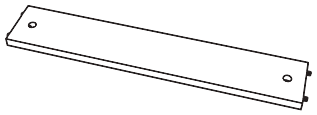
	2PC(S)		2PC(S)		3PC(S)

INCLUDED HARDWARE

ⓐ x 14 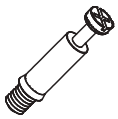	ⓑ x 14 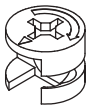	ⓒ x 6 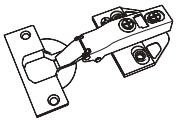	ⓓ x 24 Φ4*16 	ⓔ x 8 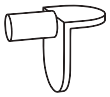
ⓕ x 4 				

RECOMMENDED TOOLS

SCREWDRIVER 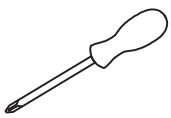	DRILL 	RUBBER MALLET 	GLUE 

1

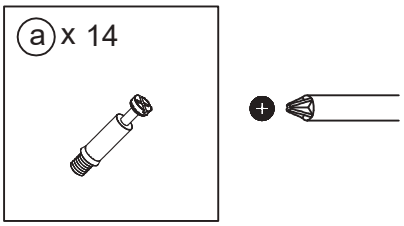

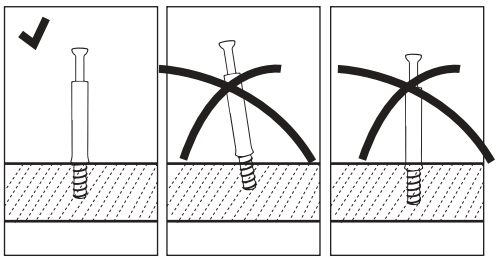

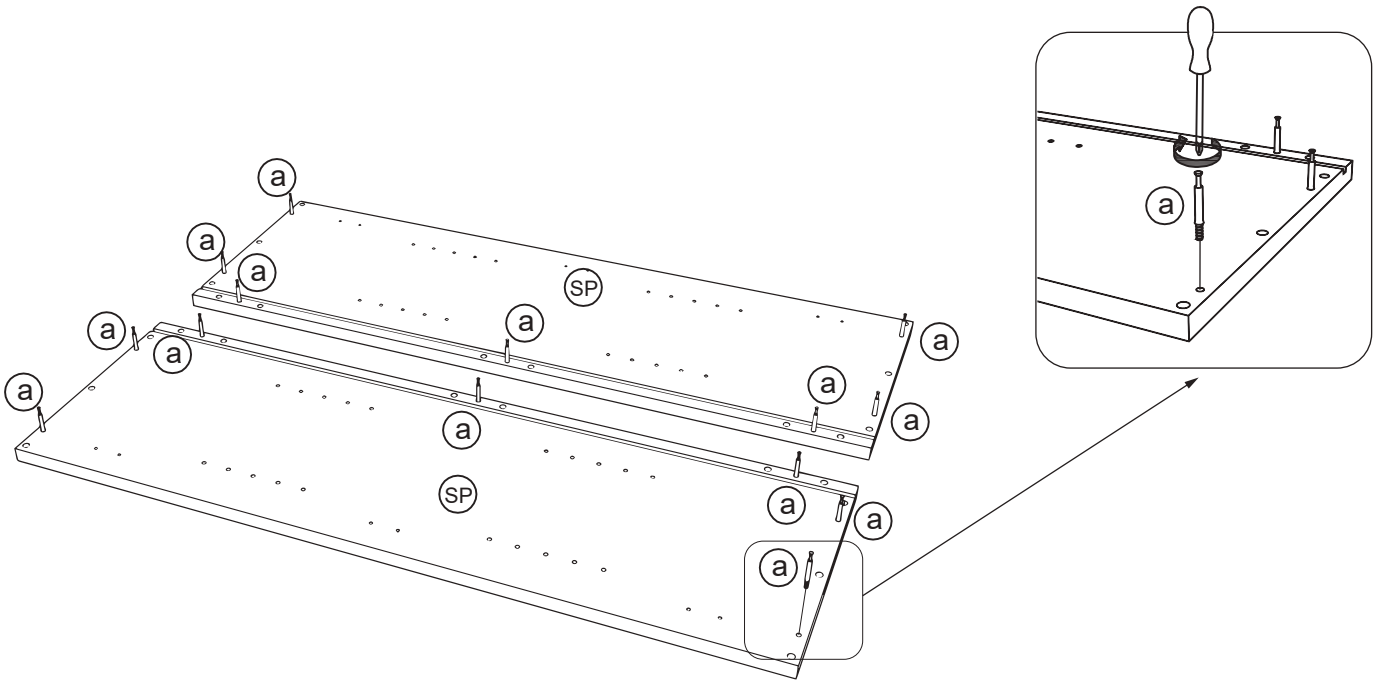

2

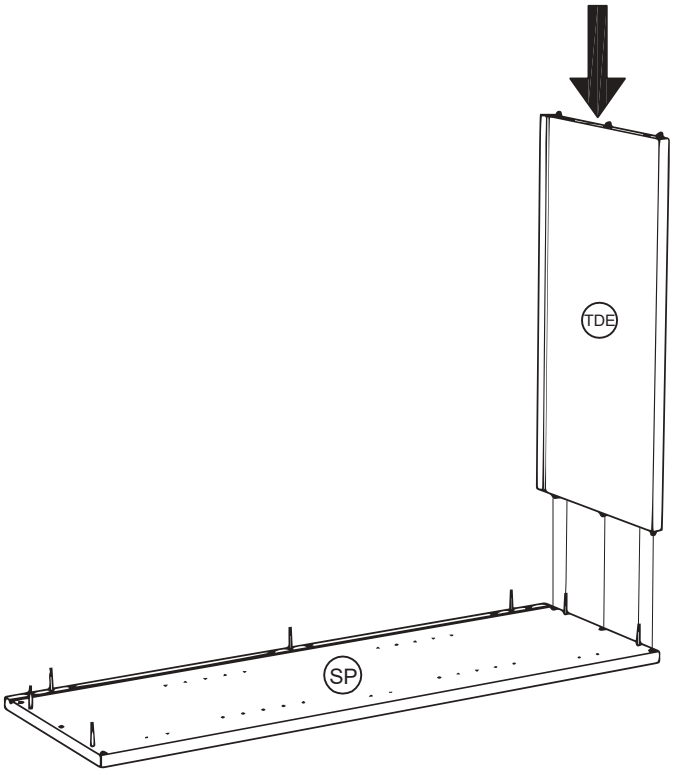

3

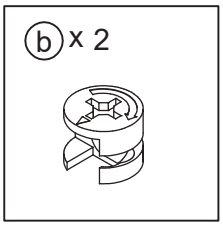

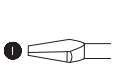

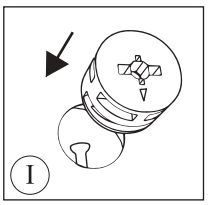

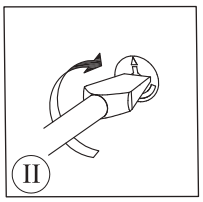



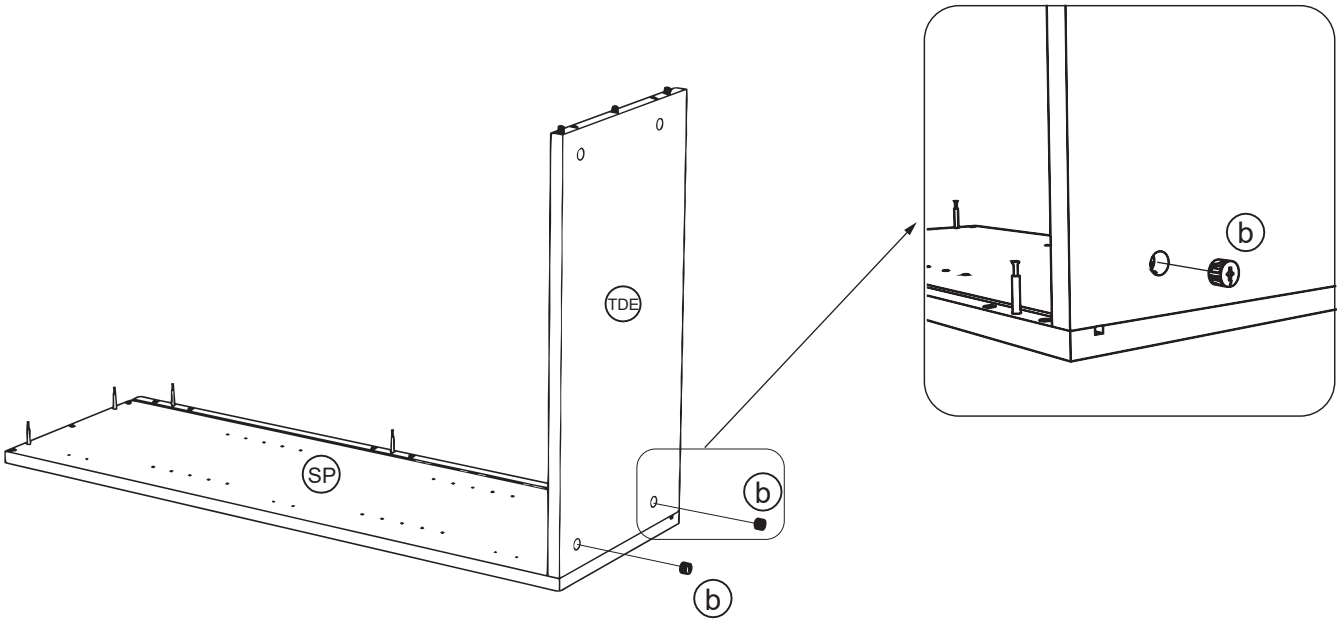

4

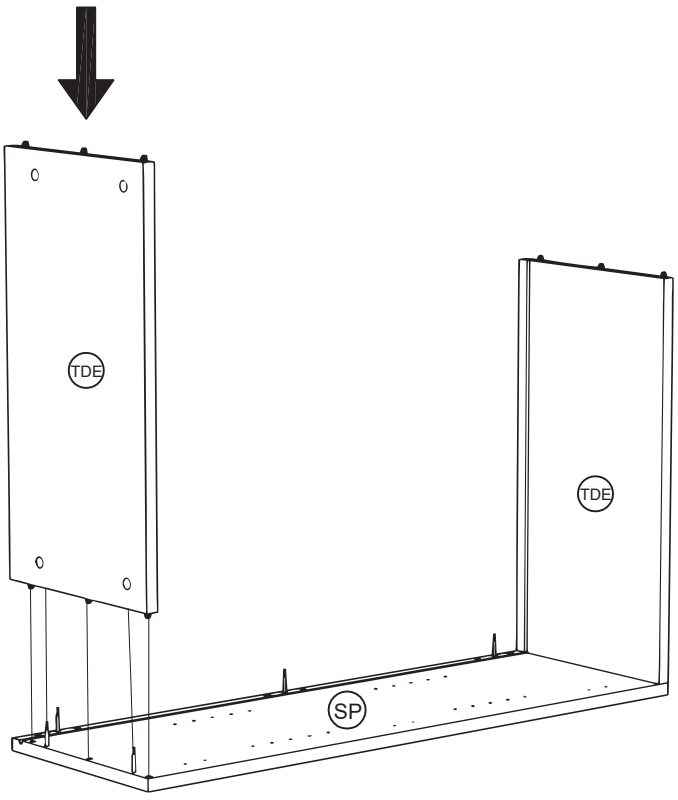

5

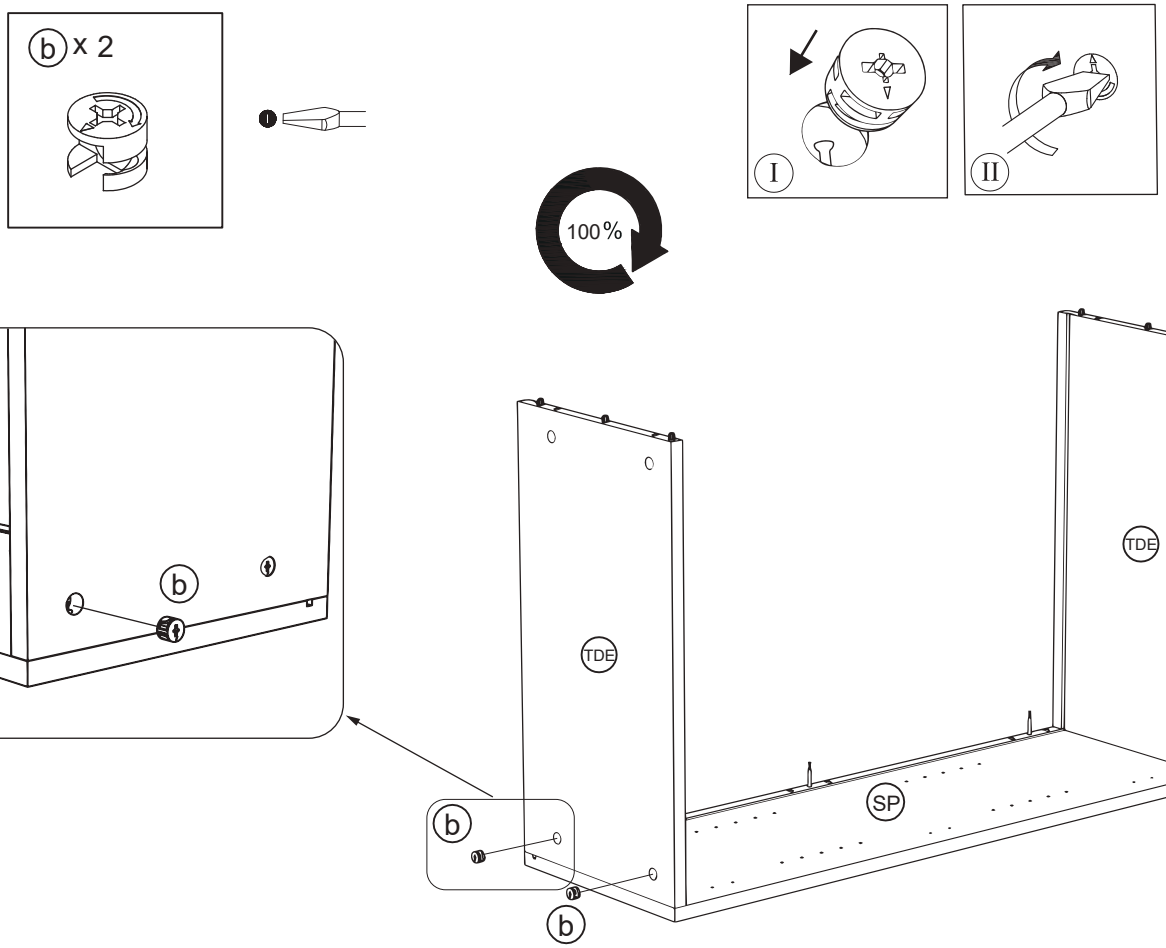

6

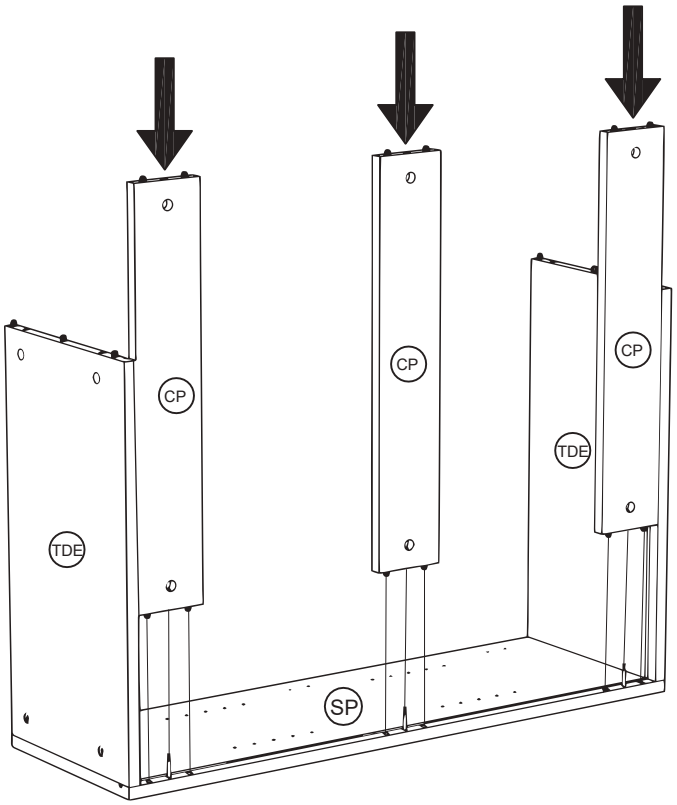

7

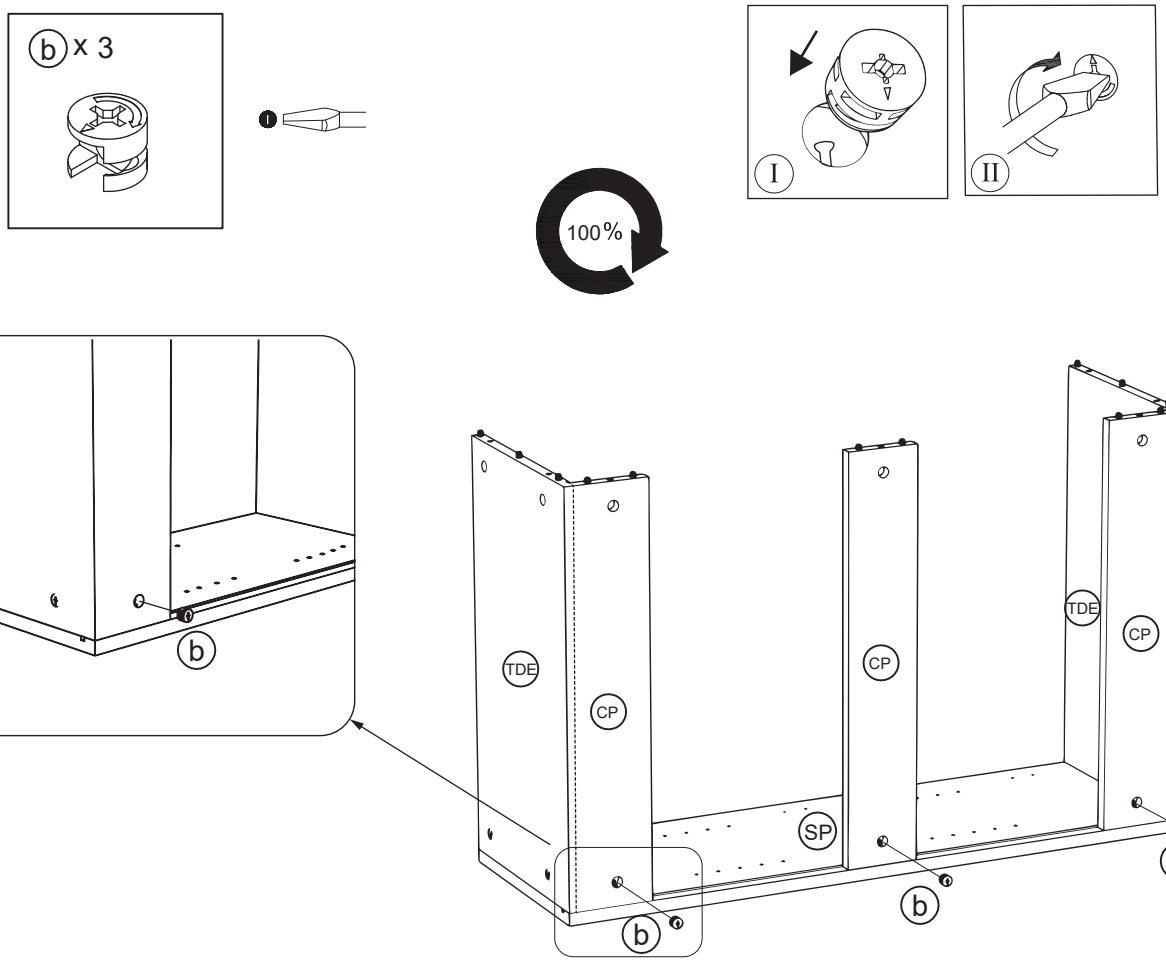

8

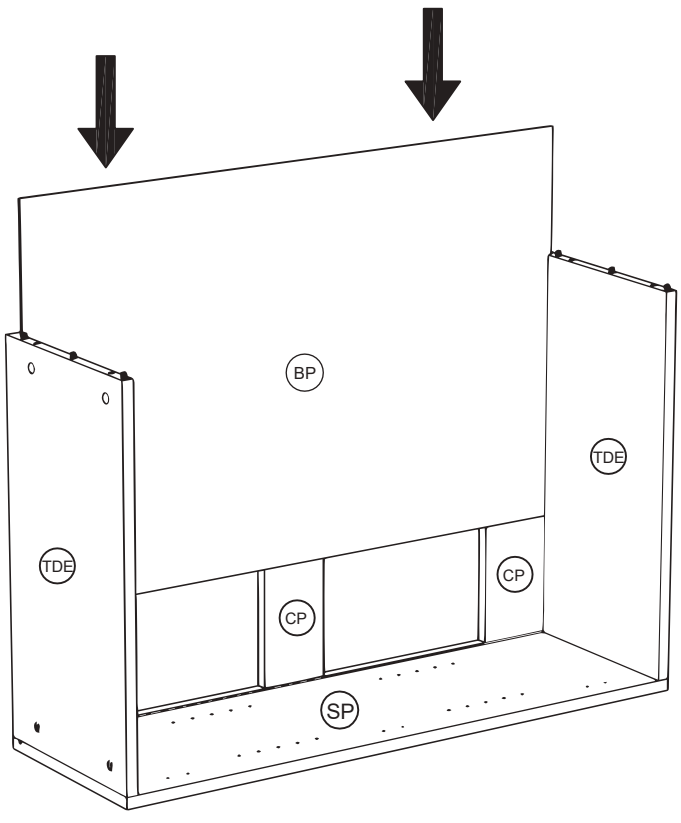

9

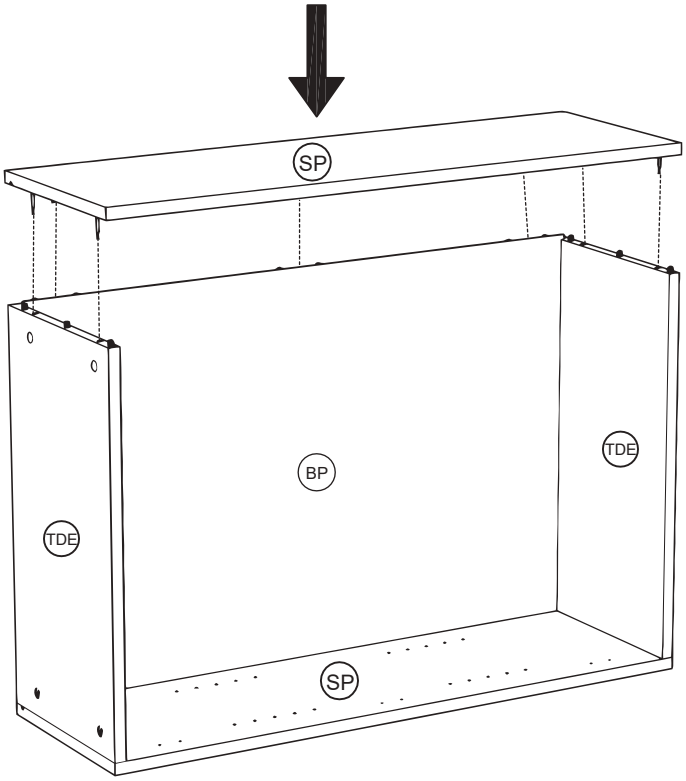

10

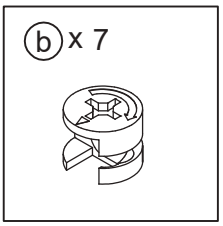





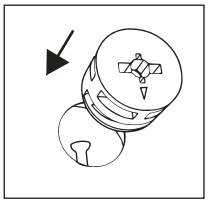

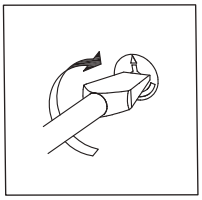

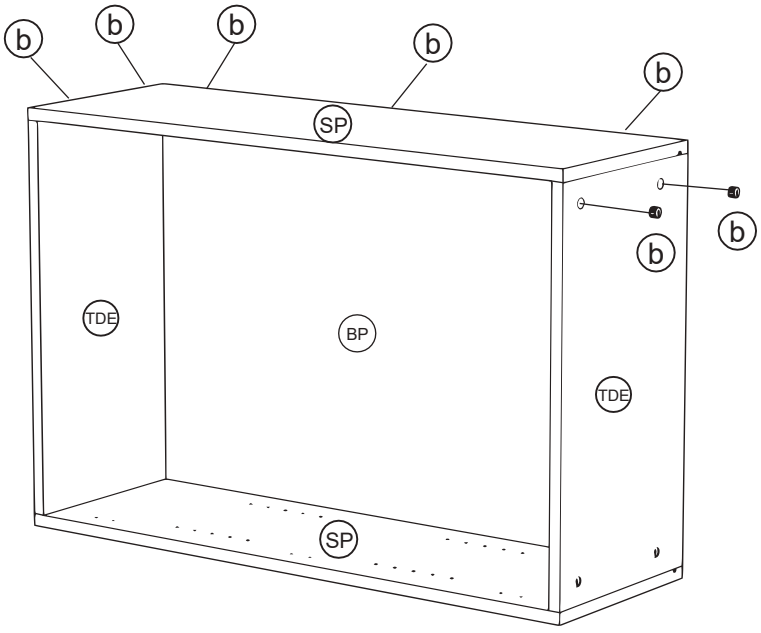

11

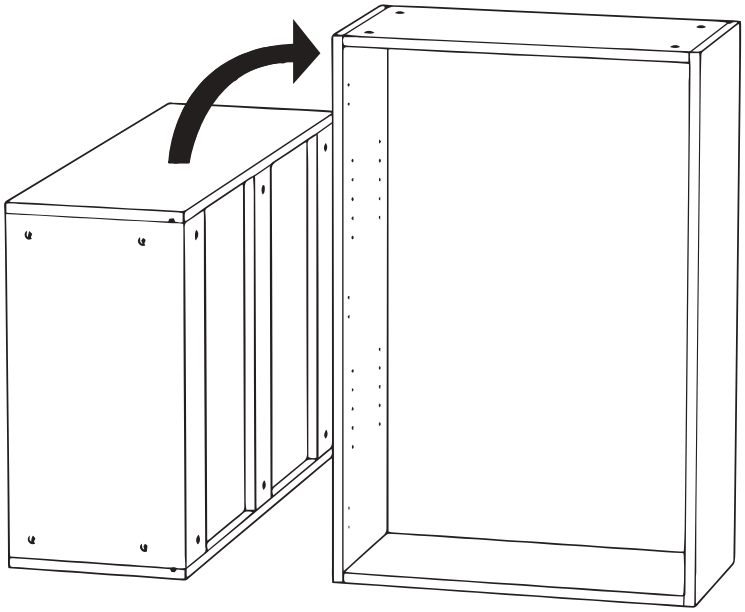

12

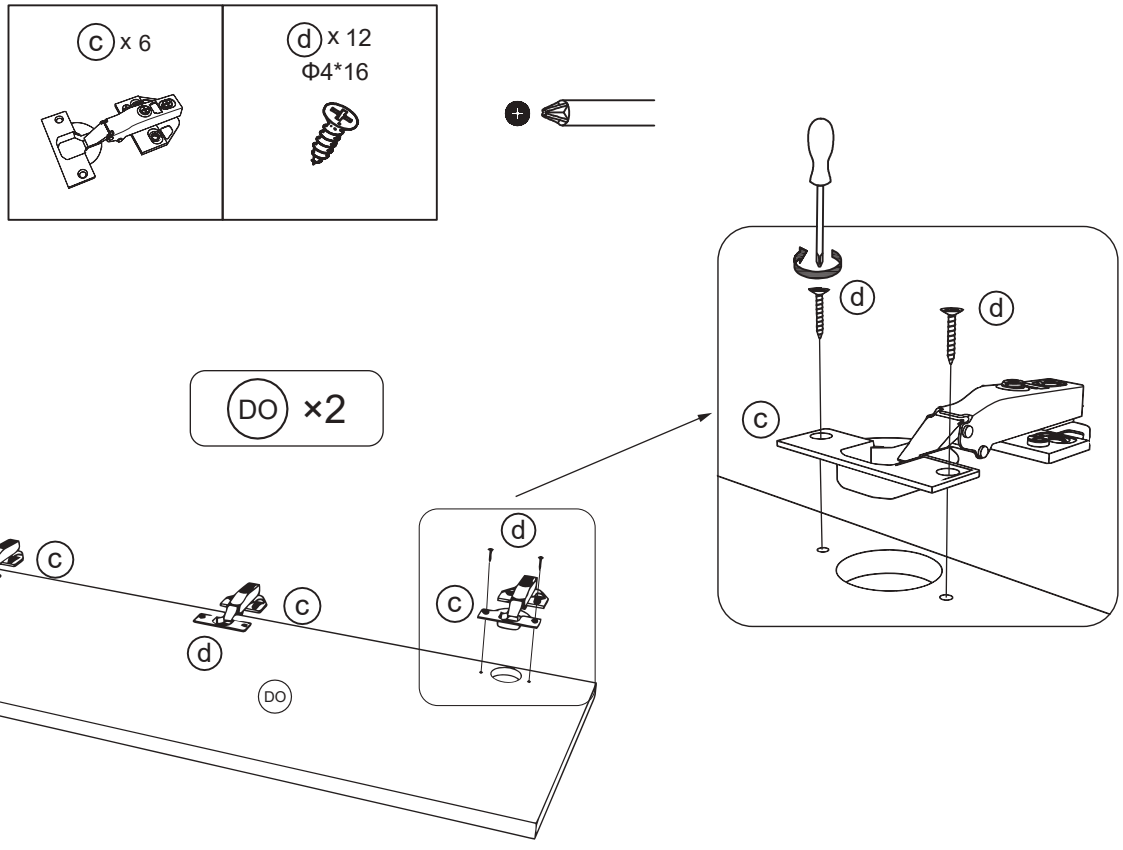

13

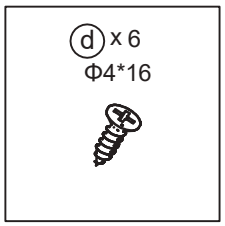
d x 6
Φ4*16



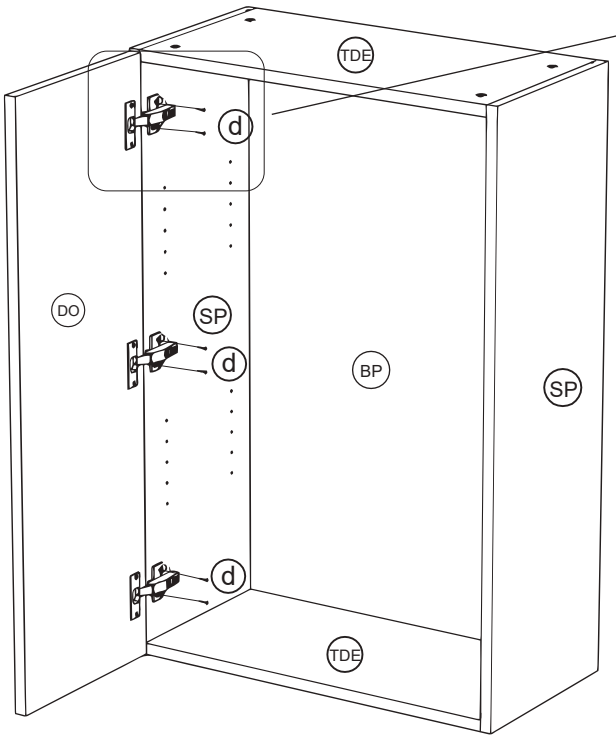
TDE
d
DO
SP
d
BP
SP
d
TDE

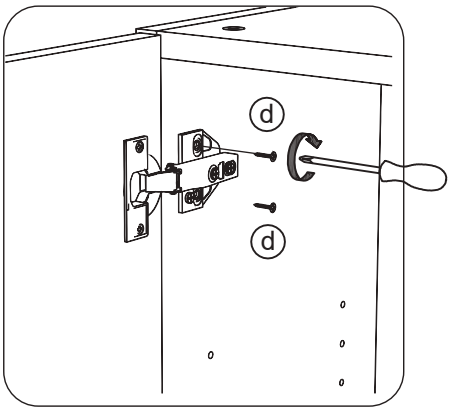
d
d

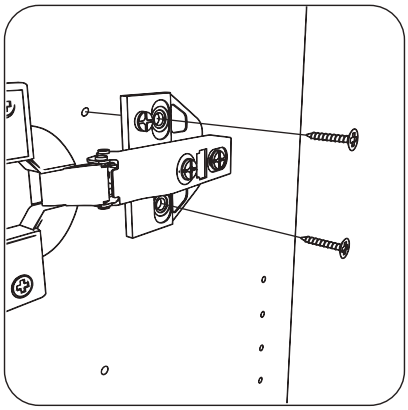

14

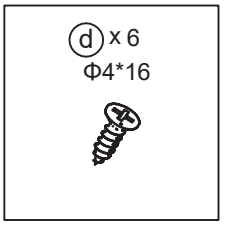
d x 6
Φ4*16



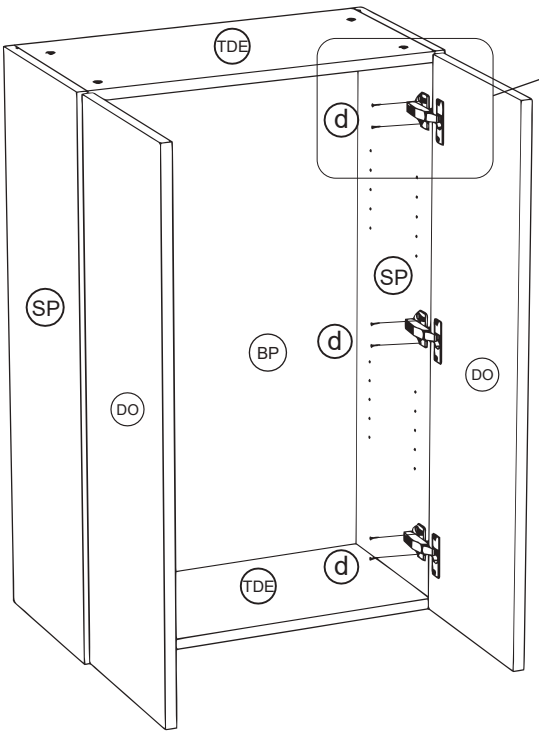
TDE
d
SP
SP
BP
d
DO
DO
d
TDE

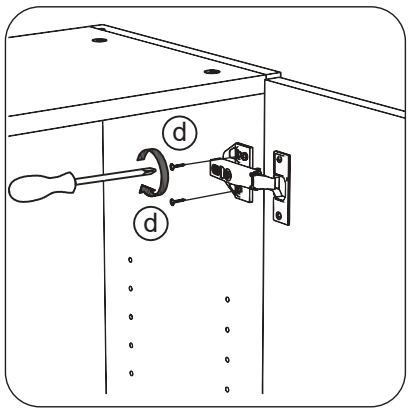
d
d

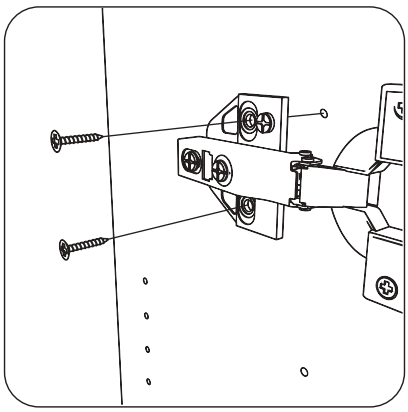

15

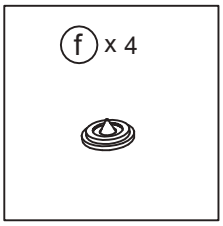



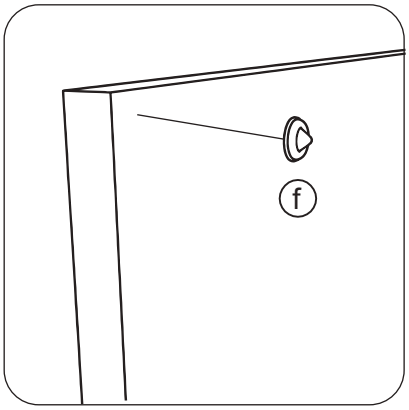

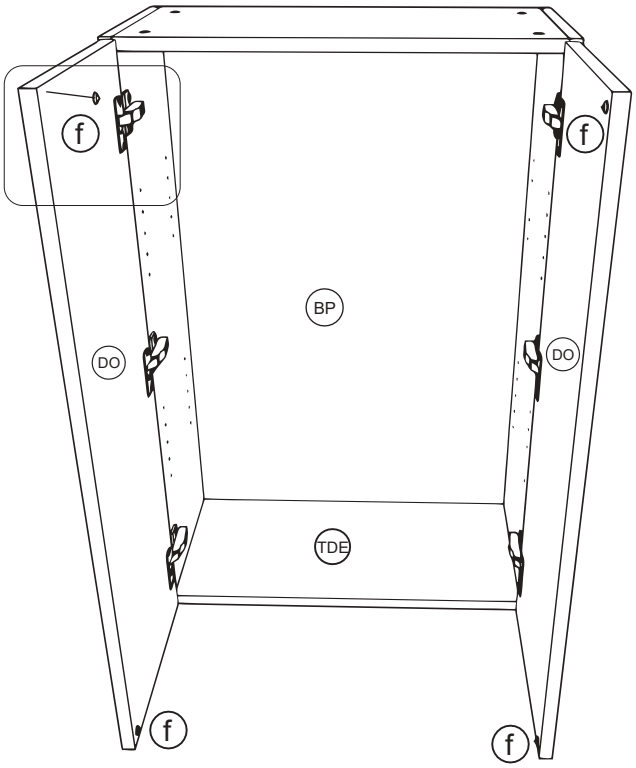

16

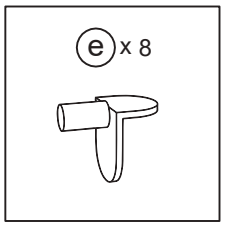

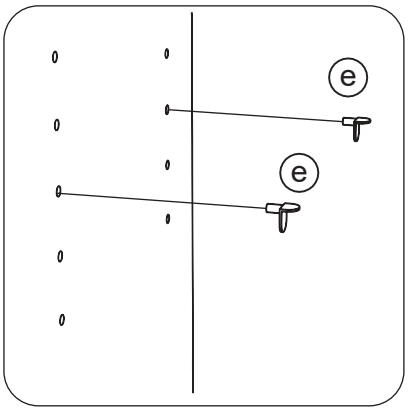

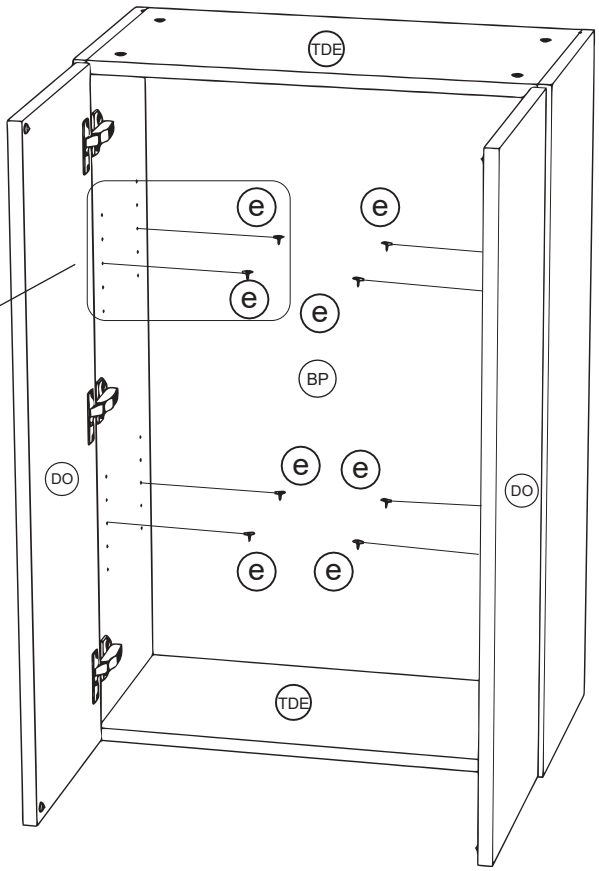

17

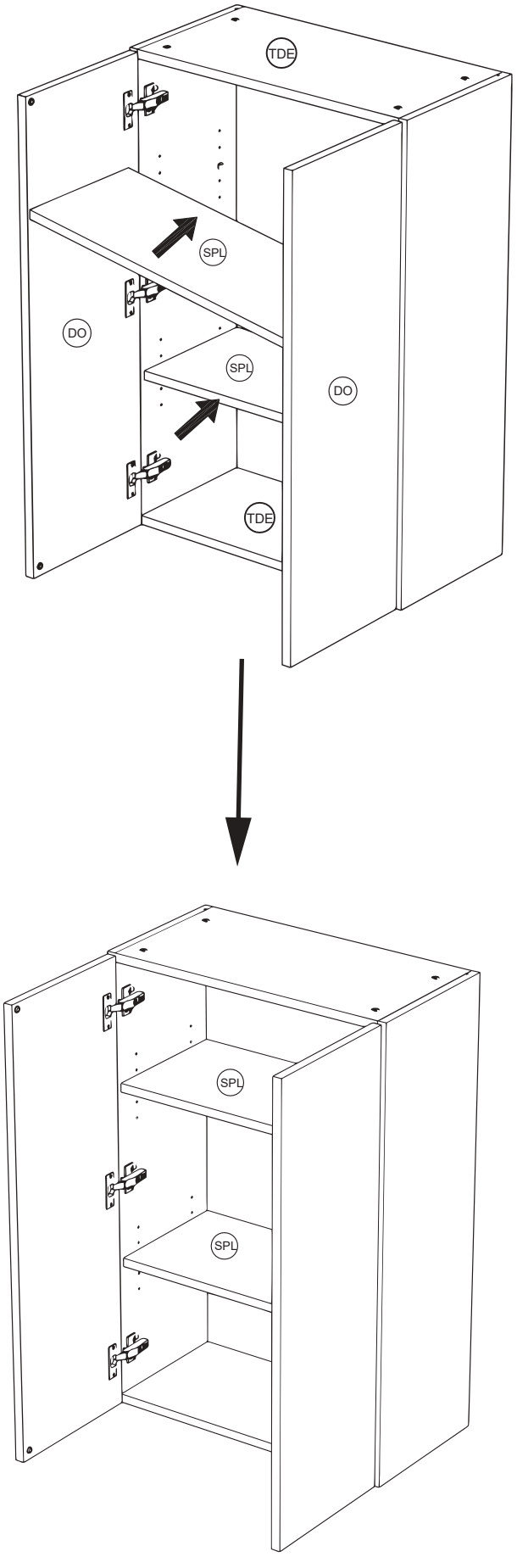

18

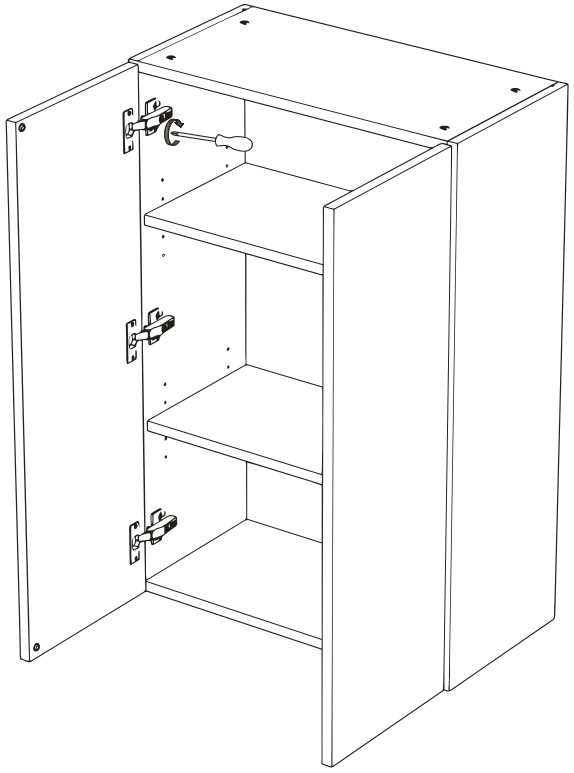

DOOR HINGE ADJUSTMENT

