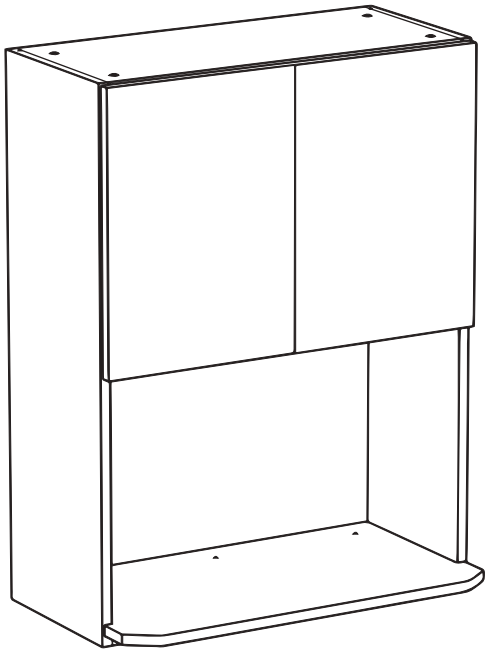

ASSEMBLY INSTRUCTION

WMC2736-WMC2740

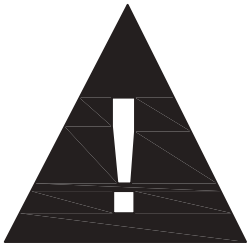

Warning: Excessive weight hazard!

Use two or more people to move, assemble, or install cabinets to avoid back injury. do not leave children unattended near cabinets. high risk of tipping if cabinets are installed incorrectly: securely attach cabinets to the wall to avoid serious injury.

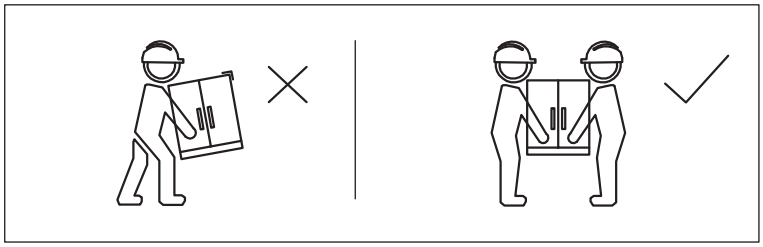

Safety and Care Advice

Important - Please read these instructions fully before starting assembly

• Check you have all the components and tools listed on the following pages.
• Remove all fittings from the plastic bags and separate them into their groups.
• Keep children and animals away from the work area, small parts could choke if swallowed.
• Make sure you heve enough space to layout the parts before starting.

• During assembly do not stand or put weight on the product. this could cause damage.
• Assemble the item as close to its final position (in lhe same room) as possible.
• Assemble on a soft level surface to avoid damaging the unit or your floor.
• Parts of the assembly will be easier with 2 people .

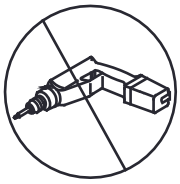

• Toreouce the likelihood of damaging your product please ensure that your power drill is set on a low torque setting.

Care and maintenance

• Only clean using a damp cloth and mild detergent, do no use bleach or abrasive cleaners.

• From time to time check that there are no loose screws on this unit.

• This product should not be discarded with household waste. Take to your local authority waste disposal centre,

Handy Hints

• Assemble all parts and bolts loosely during assembly, only once the product is complete should you fully tighten the bolts

•Regularly check and ensure that all bolts and fittings are tightend properly,

WARNING

In order to help prevent overturning -
please follow these instructions

To prolong wear & tear and avoid damaging the product,
please follow the suggestions below:

- Avoid putting excessive weights inside the drawers.
- Do not push or lean force onto the doors while opened.
- Remove excessive water or liquid from the product as soon as possible.
- Painted doors should not be cleaned with soluble cleaners;
all benzene and resin solvents are not suitable for use as panel cleaning agents.

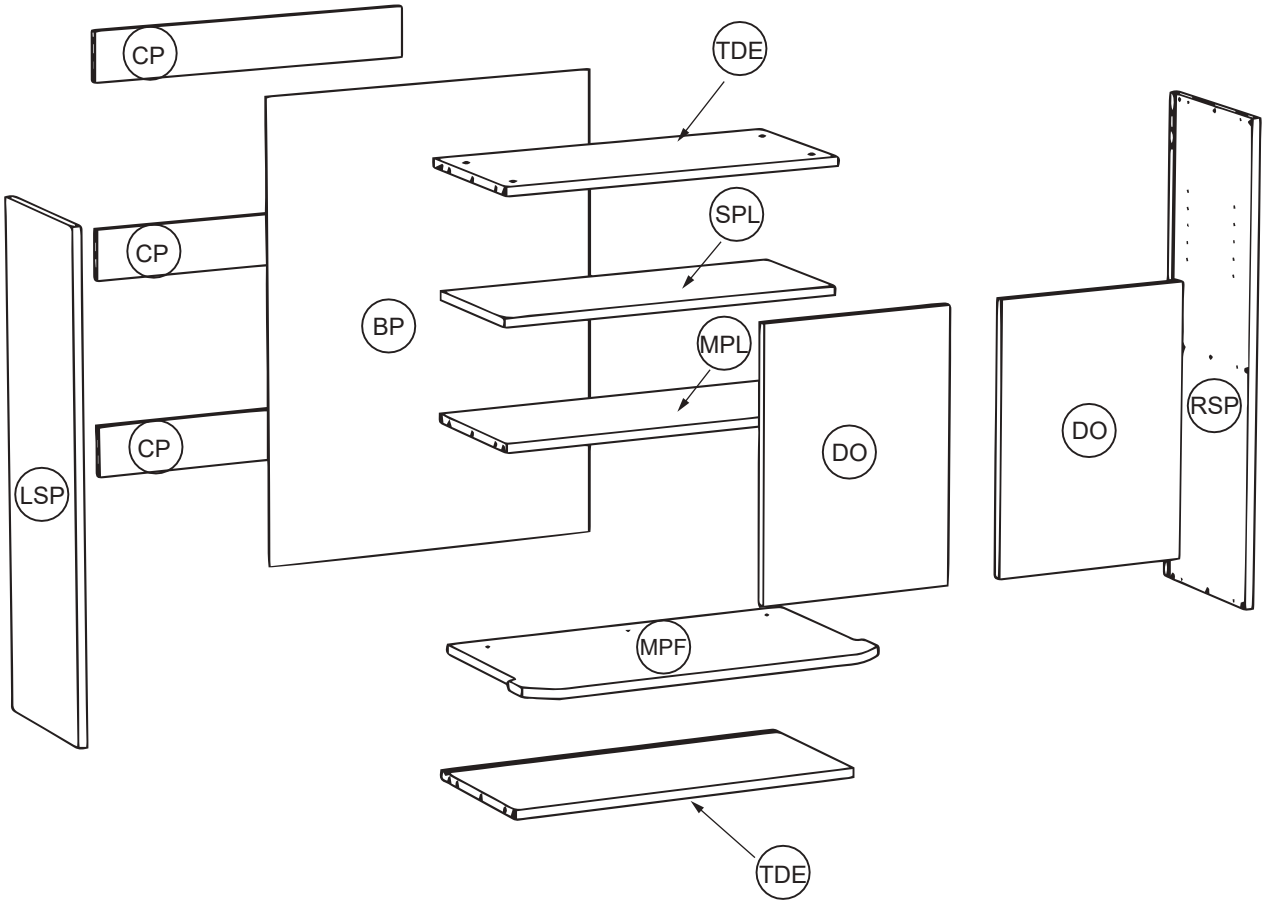
CP
TDE
SPL
CP
BP
MPL
CP
LSP
DO
DO
RSP
MPF
TDE

PRODUCT PARTS

DO	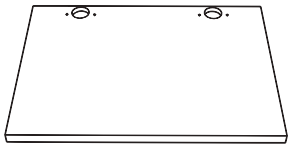	LSP	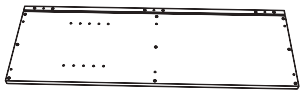	RSP	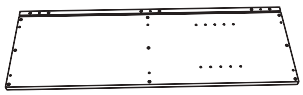
	2PC(S)		1PC(S)		1PC(S)
BP	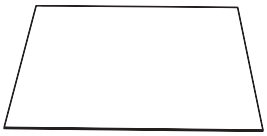	TDE		MPF	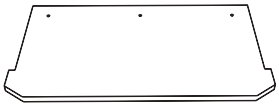
	1PC(S)		2PC(S)		1PC(S)
MPL	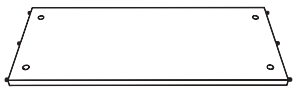	CP	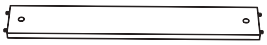	SPL	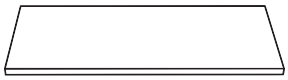
	1PC(S)		3PC(S)		1PC(S)

INCLUDED HARDWARE

ⓐ x 18 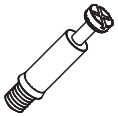	ⓑ x 18 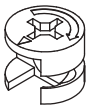	ⓒ x 4 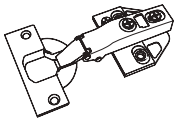	ⓓ x 16 Φ4*16 	ⓔ x 4 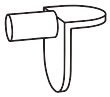
ⓕ x 4 	ⓖ x 3 Φ4*25 			

RECOMMENDED TOOLS

SCREWDRIVER	DRILL	RUBBER MALLET	GLUE
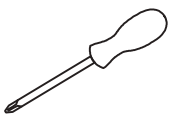			

1

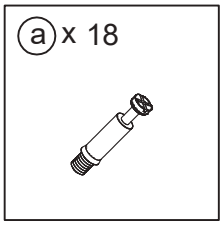



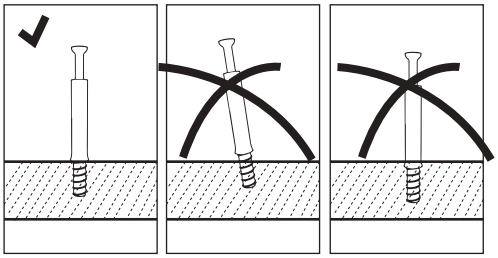

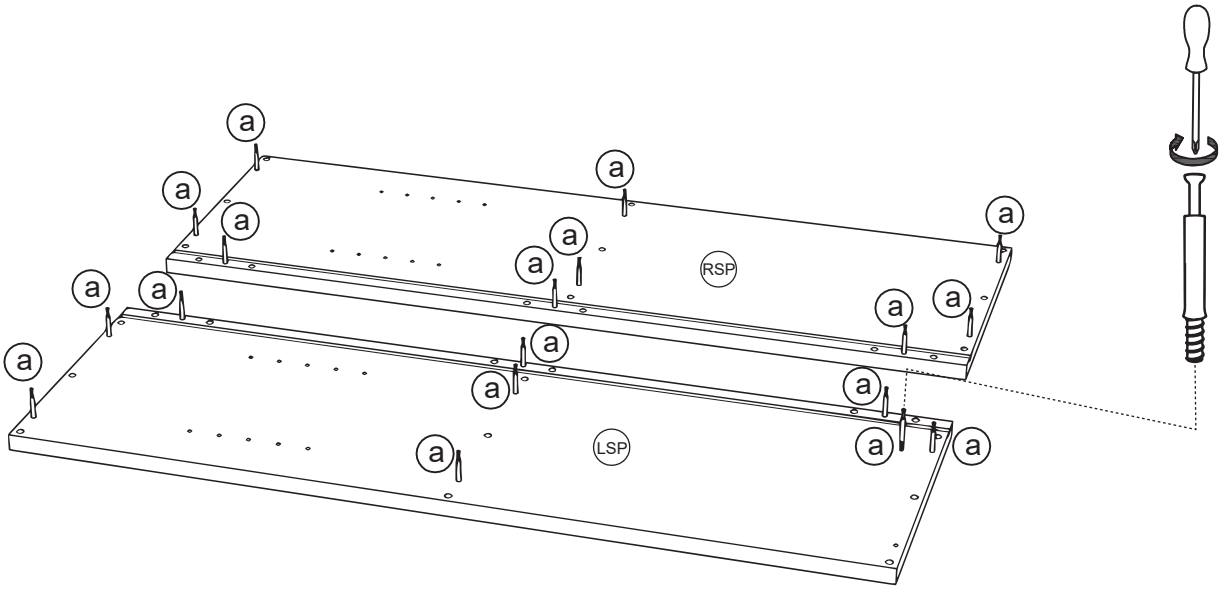

2

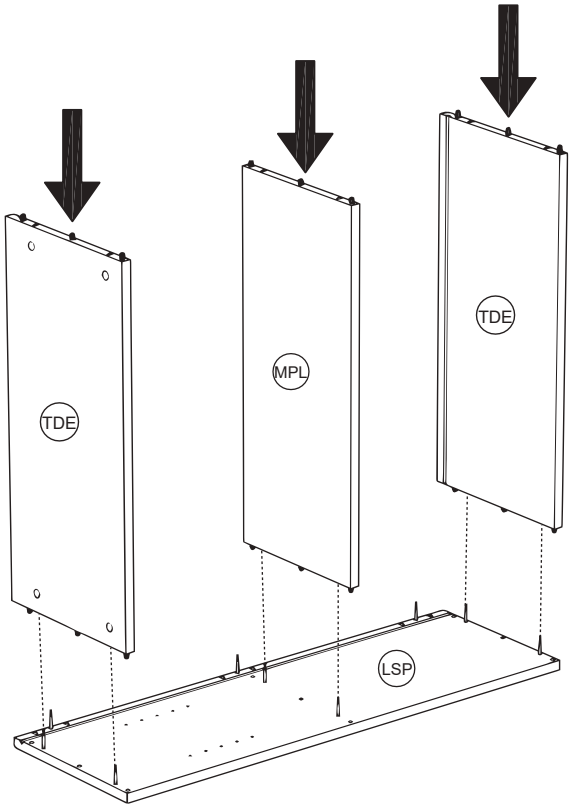

3

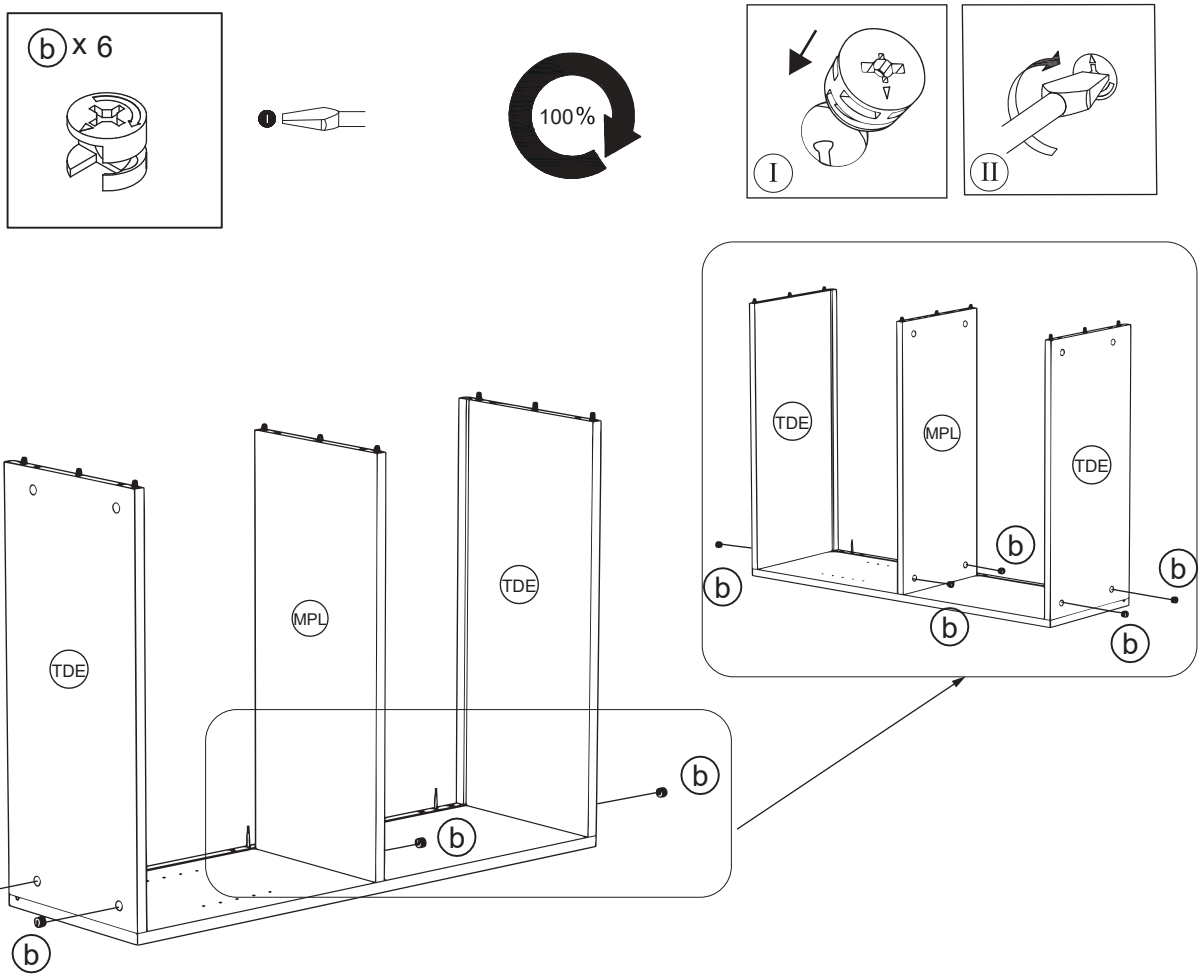
b x 6
100%
I
II
TDE
MPL
TDE
b
TDE
MPL
TDE
b
b
b
b
b

4

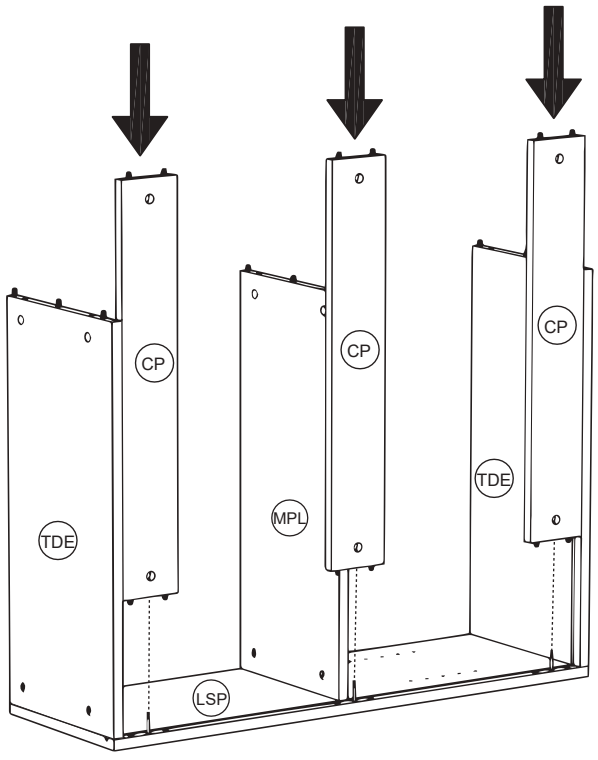
CP
CP
CP
TDE
MPL
TDE
LSP

5

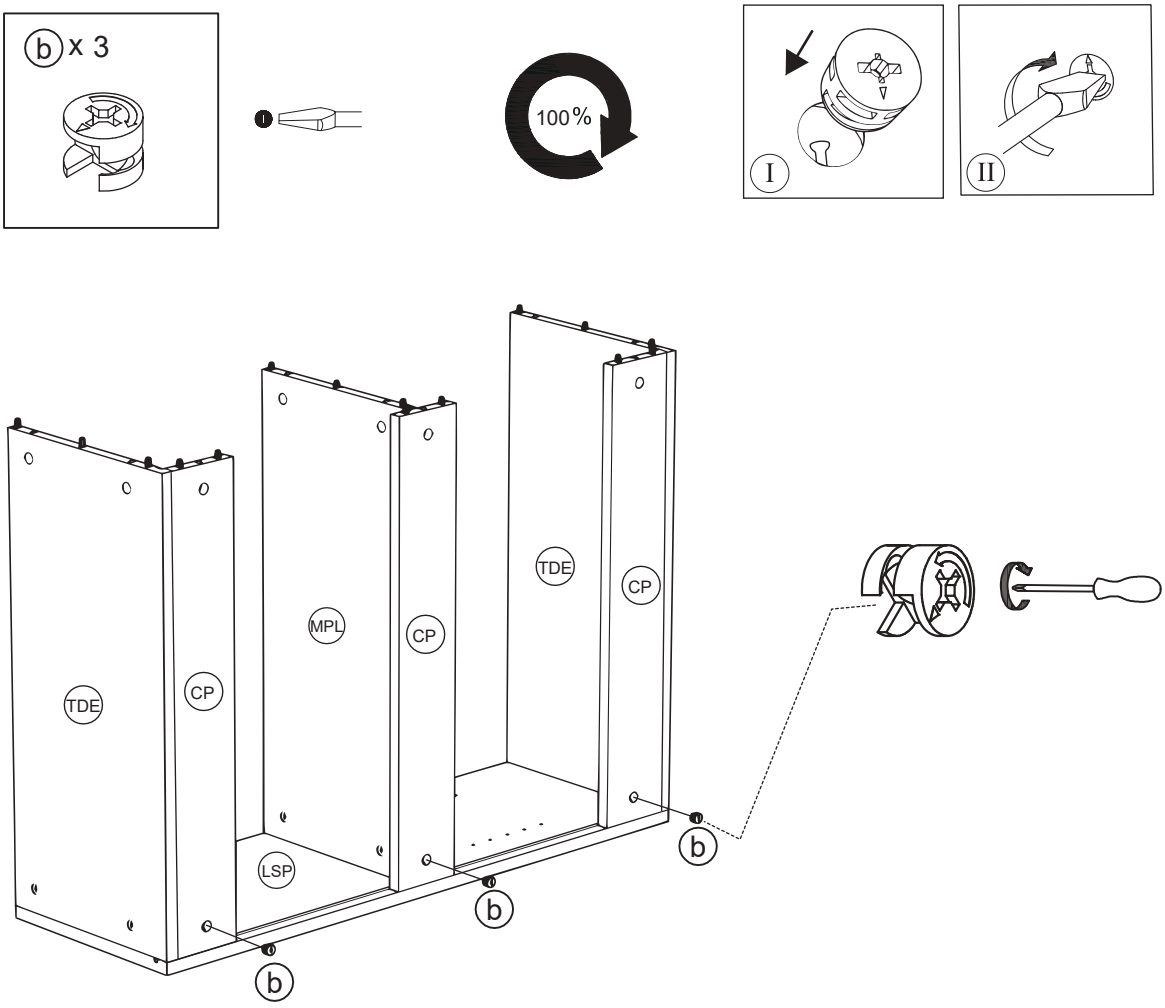

6

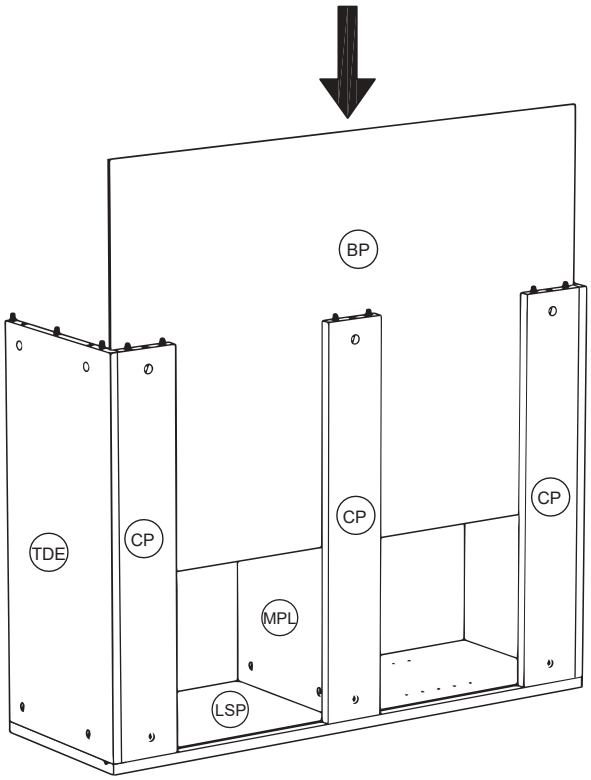

7

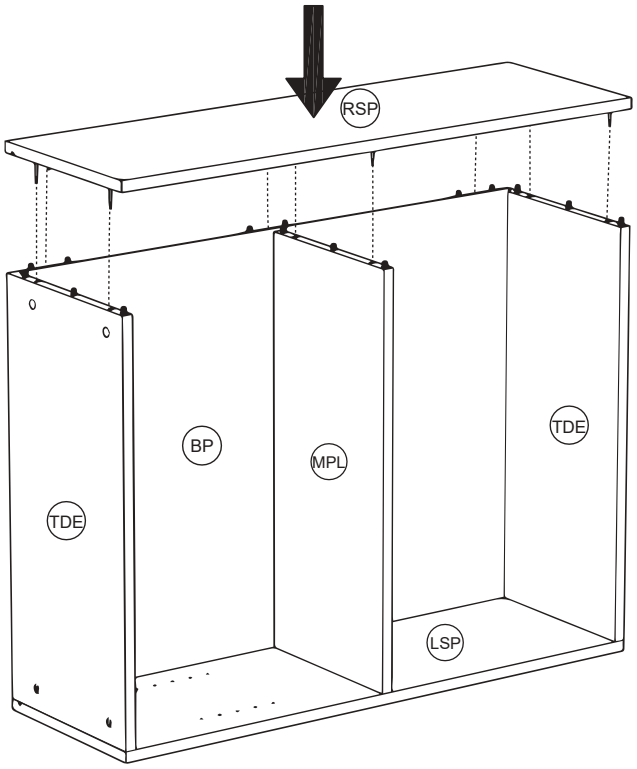

8

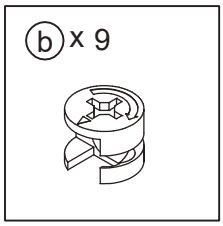





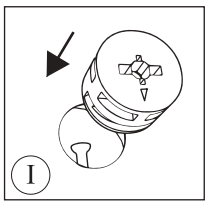

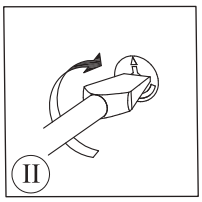

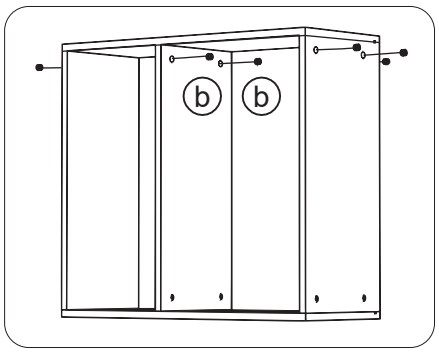

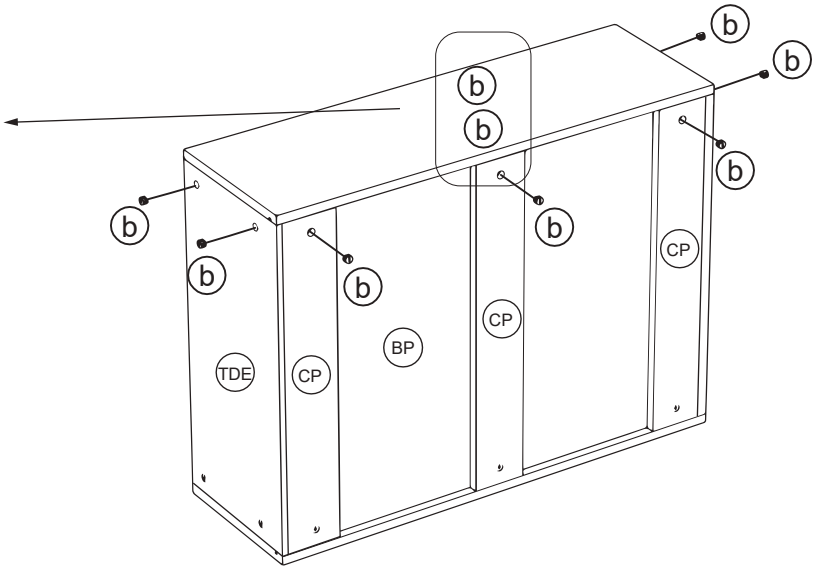

9

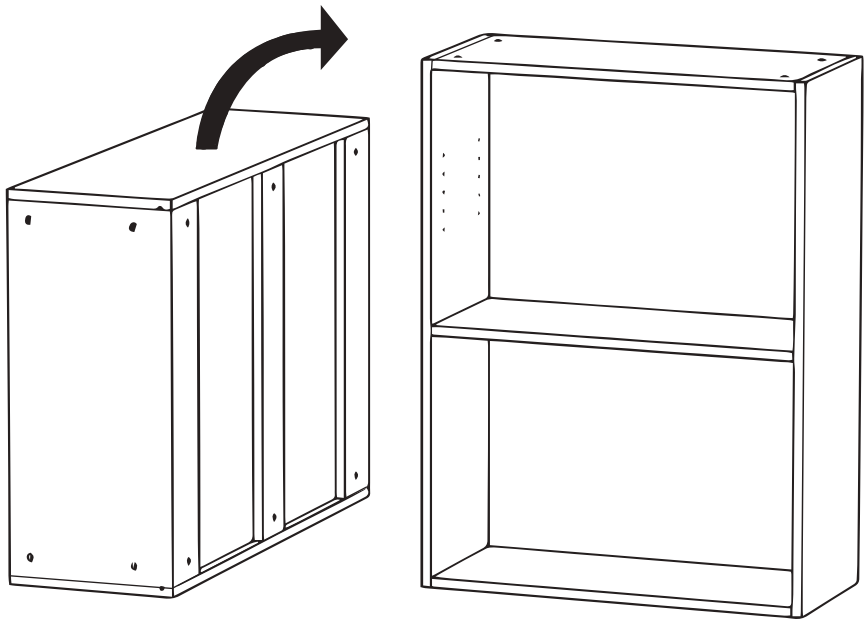

10

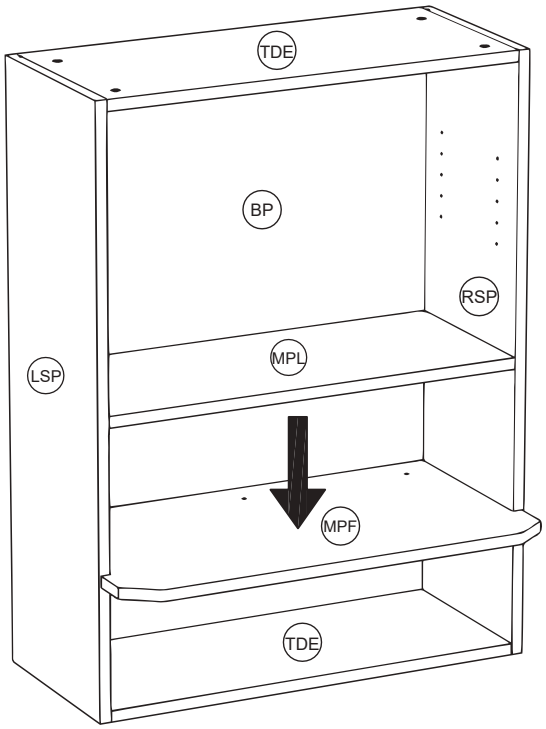

11

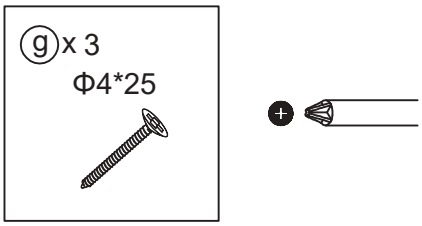

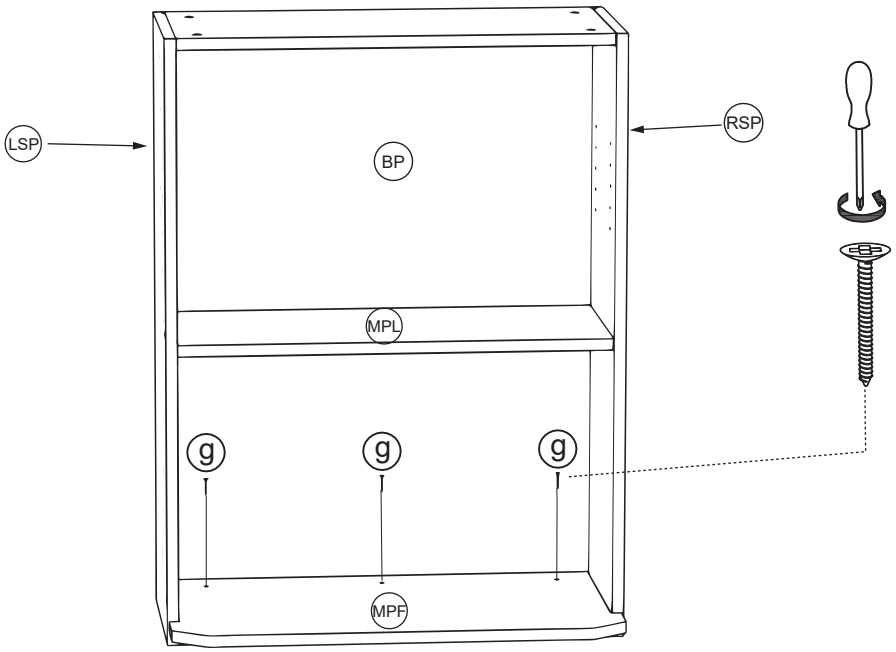

12

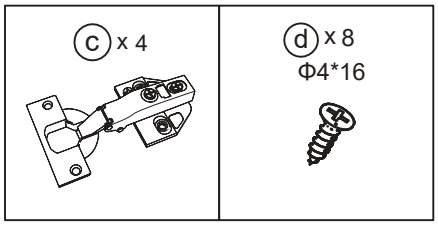



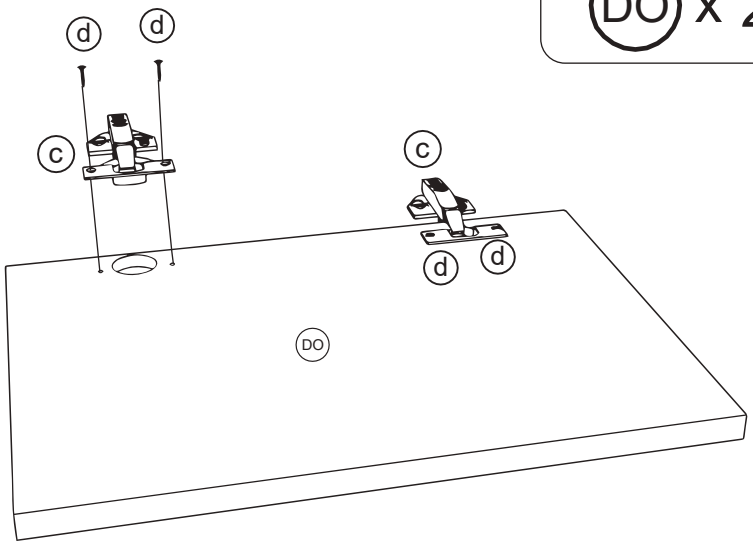

13

ⓓ x 4
Φ4*16

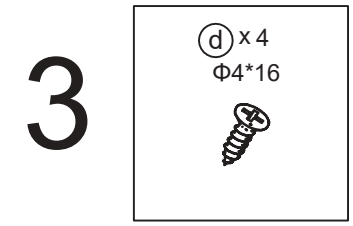



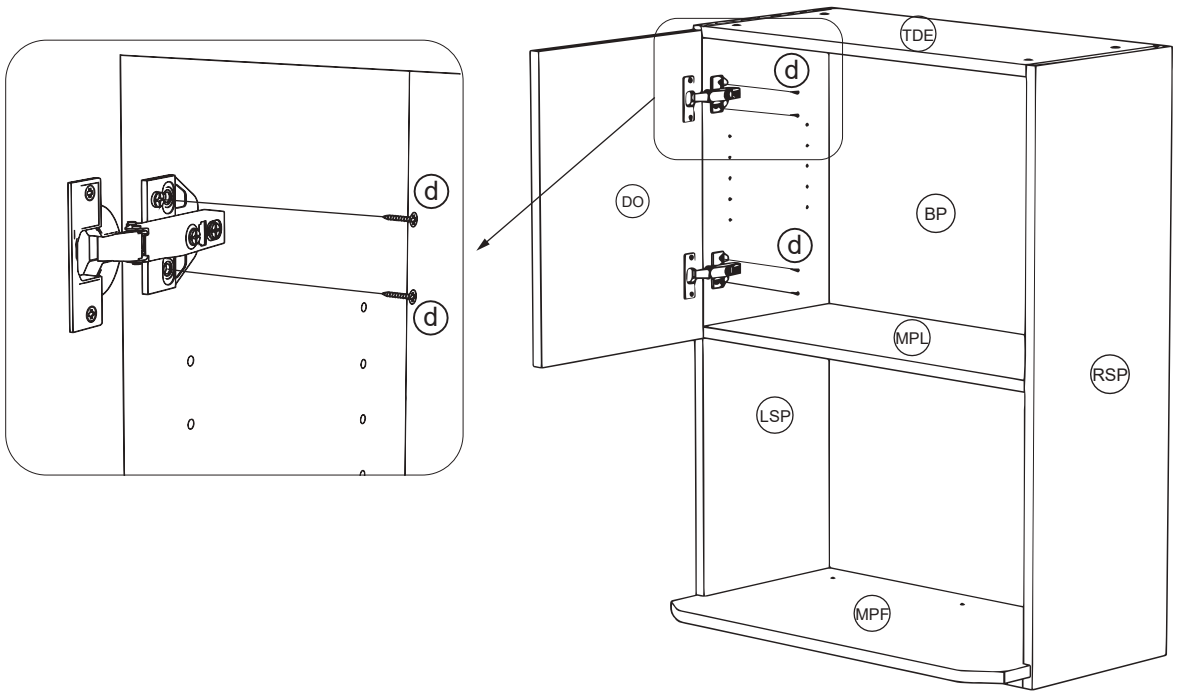

14

ⓓ x 4
Φ4*16

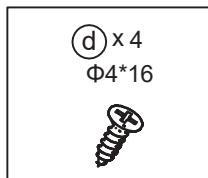



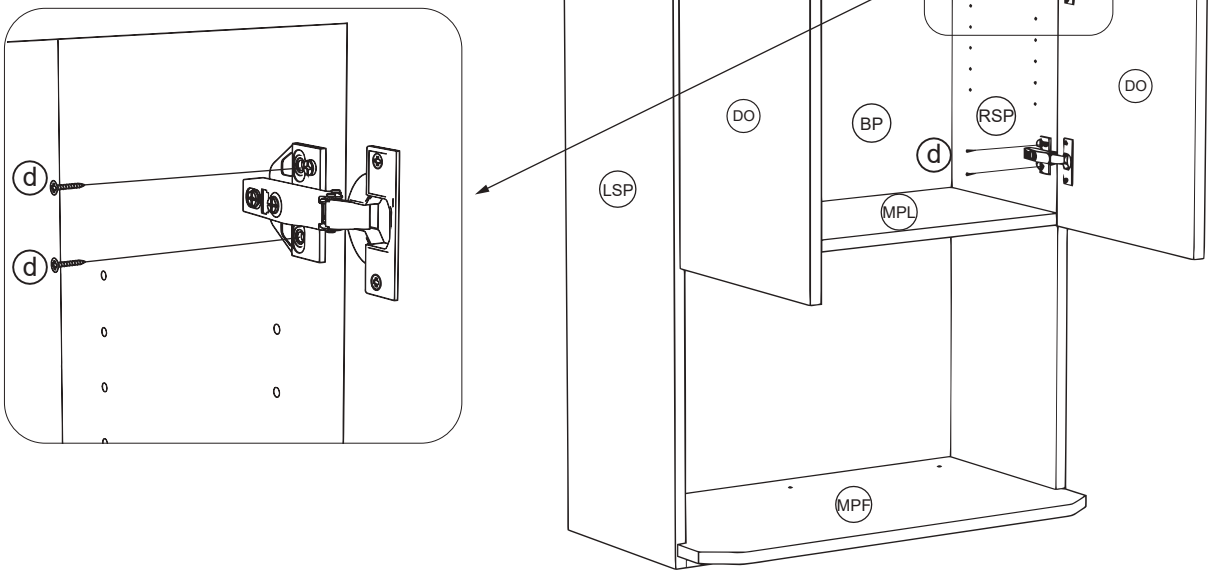

15



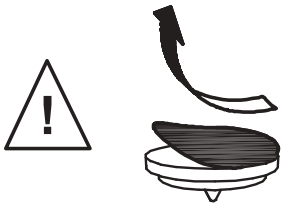

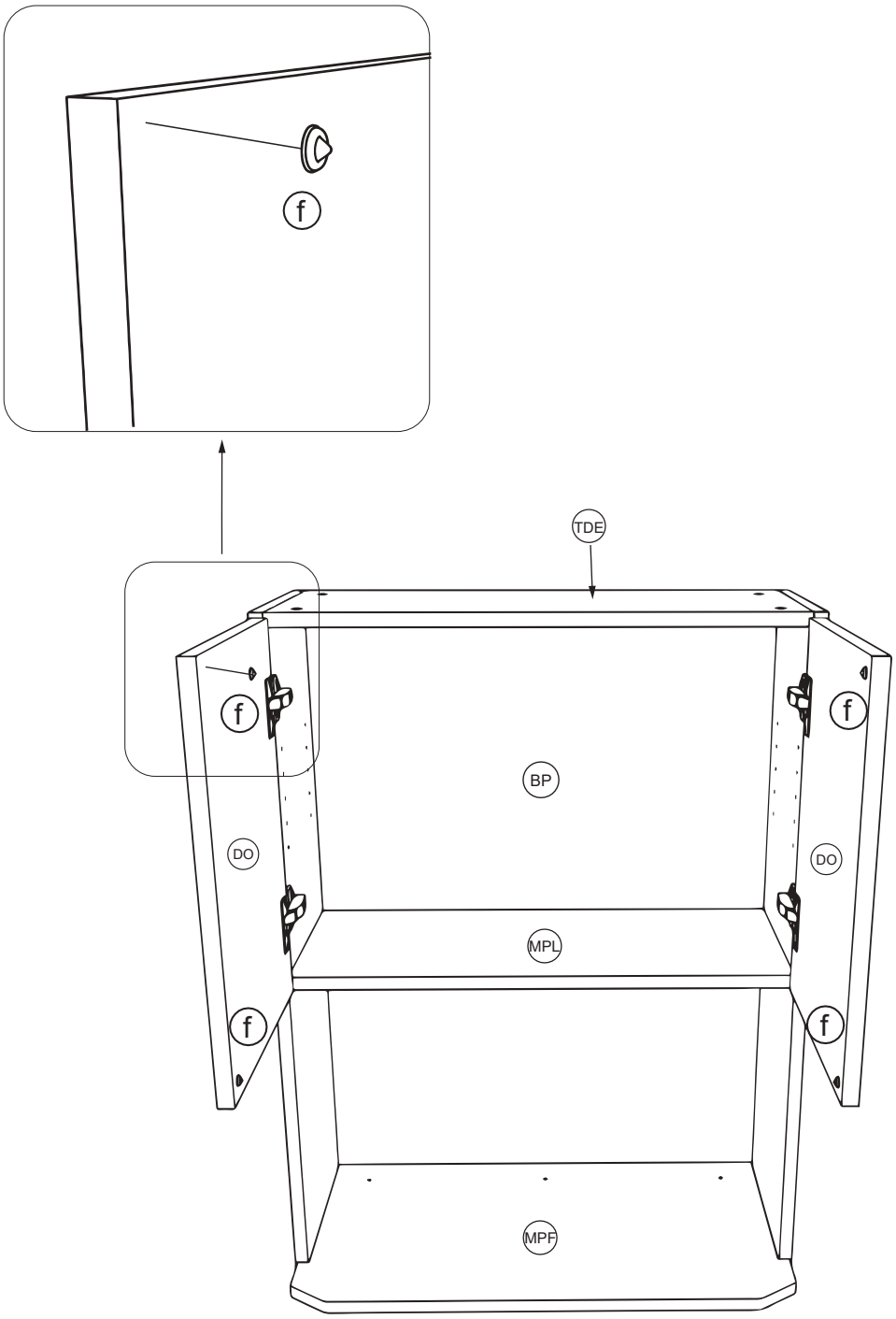

16

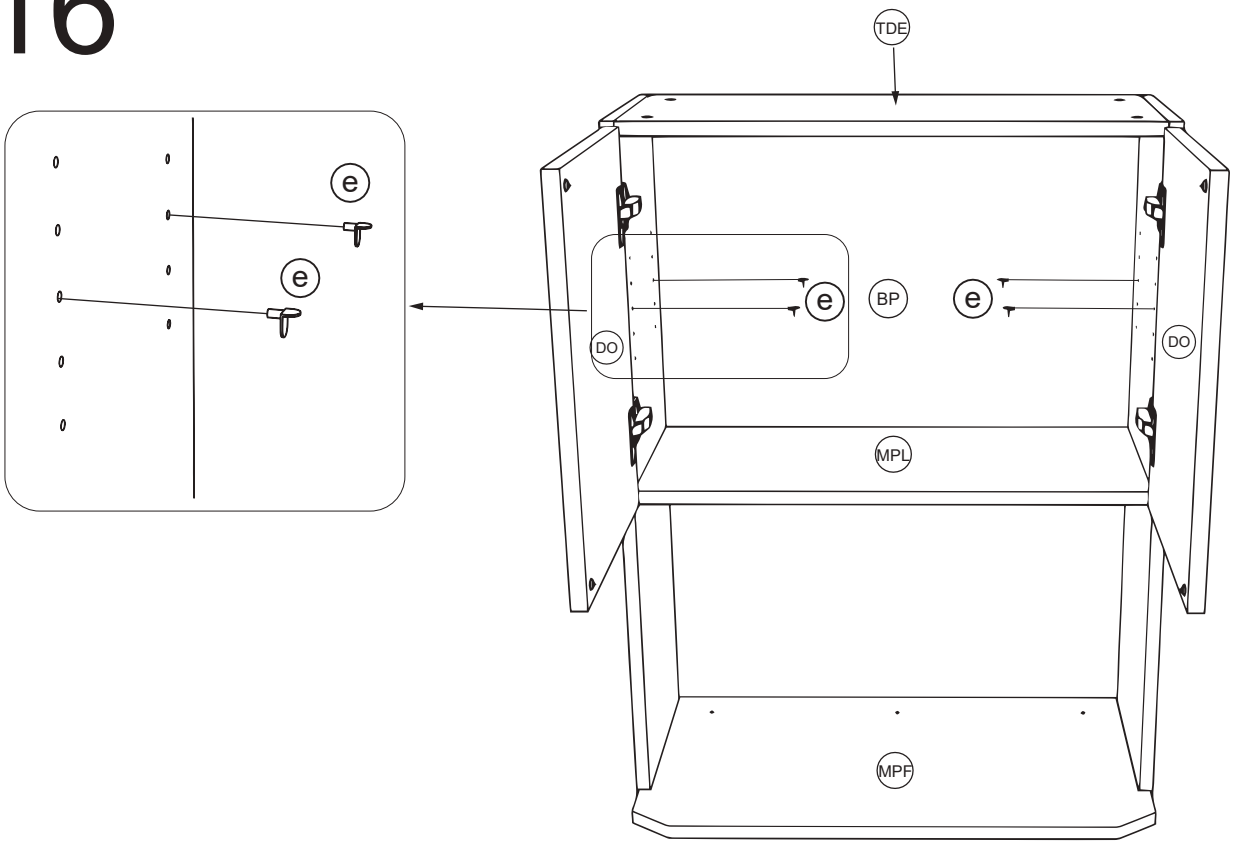
e
e
TDE
e
BP
e
DO
DO
MPL
MPF

17

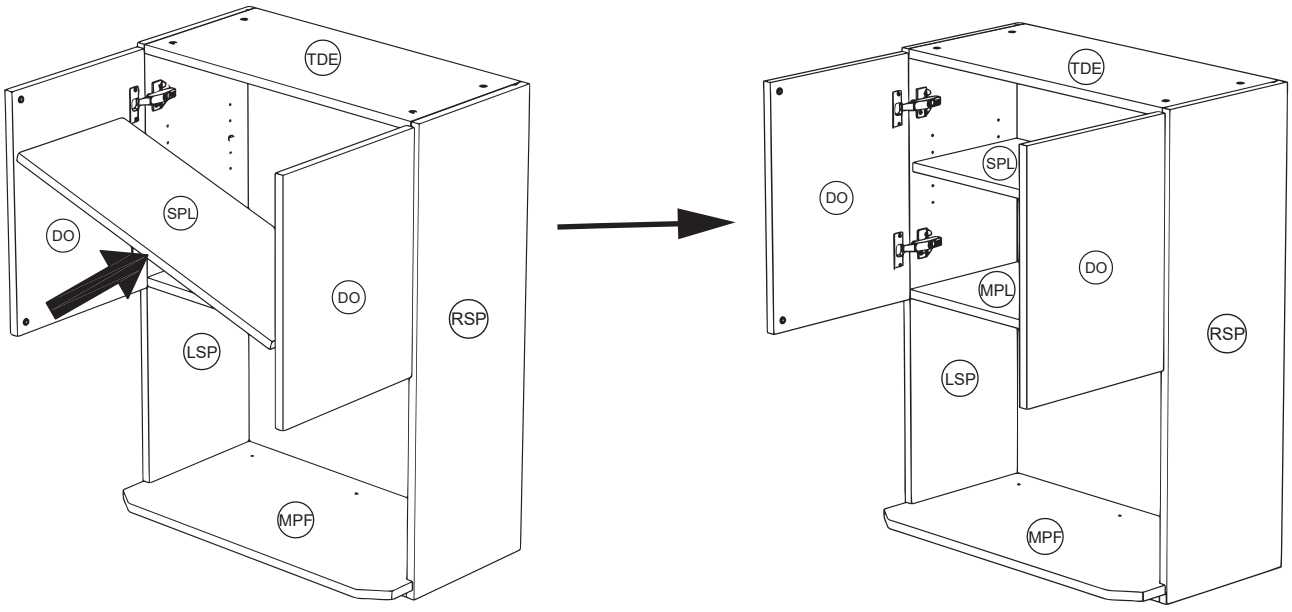
TDE
SPL
DO
DO
RSP
LSP
MPF
TDE
SPL
DO
DO
MPL
RSP
LSP
MPF

18

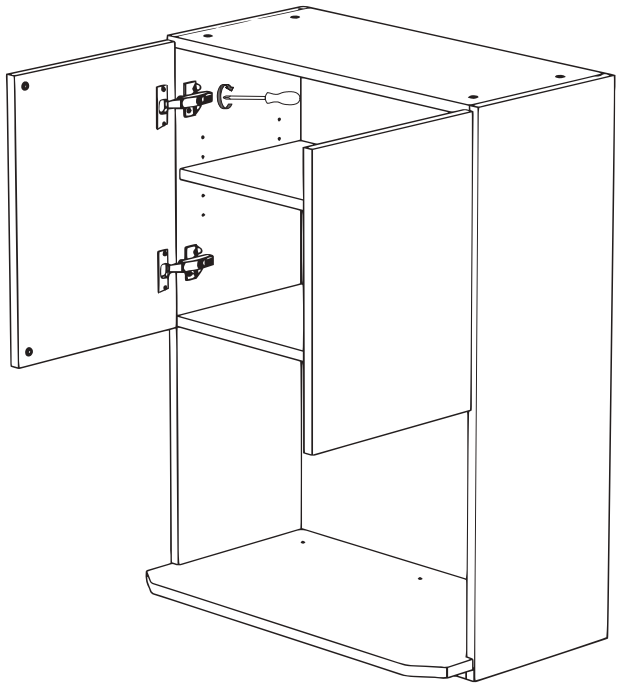

DOOR HINGE ADJUSTMENT

